Hitachi Power Tools

LIST NO. E510

ELECTRIC TOOL PARTS LIST

■ JIG SAW

2005・10・12

Model CJ 65S3

(E1)

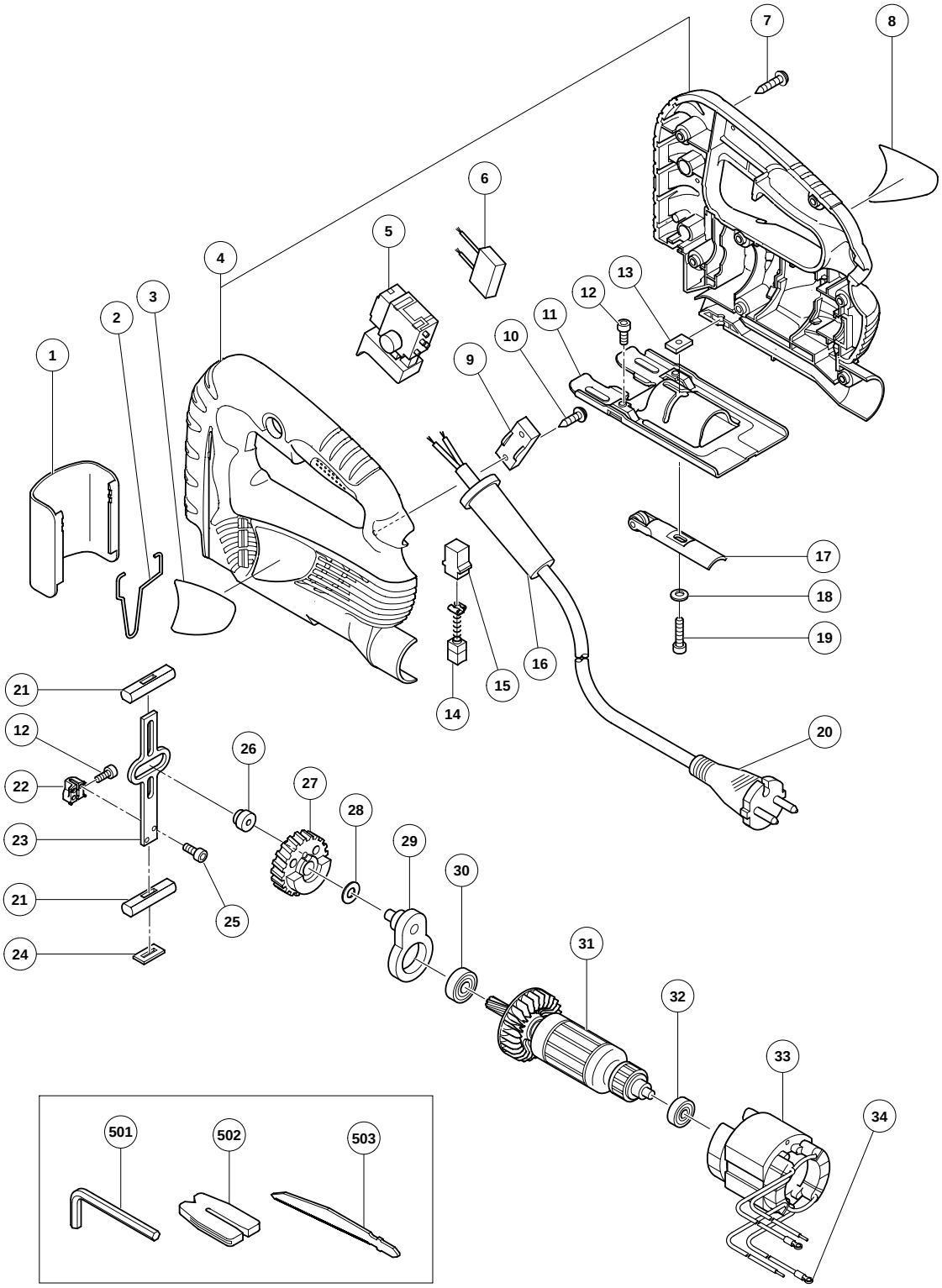

ITEM NO.	CODE NO.	DESCRIPTION	NO. USED	REMARKS	
1	325-163	CHIP COVER	1		
2	325-164	GUARD BAR	1		
3		HITACHI LABEL	1		
4	325-167	HOUSING (A).(B) SET	1		
5	323-575	SWITCH (1P PILLAR TYPE)	1		
6	930-039	NOISE SUPPRESSOR	1		
7	301-653	TAPPING SCREW (W/FLANGE) D4X20 (BLACK)	7		
8		NAME PLATE	1		
9	960-266	CORD CLIP	1		
10	984-750	TAPPING SCREW (W/FLANGE) D4X16	2		
11	325-161	BASE	1		
12	949-811	HEX. SOCKET HD. BOLT M4X8 (10 PCS.)	2		
13	962-991	PLATE NUT	1		
14	999-041	CARBON BRUSH (1 PAIR)	2		
15	930-483	BRUSH HOLDER	2		
16	930-487	CORD ARMOR D8.2	1		
17	325-162	ROLLER HOLDER	1		
18	323-210	BOLT WASHER M4 (BLACK)	1		
19	949-754	HEX. SOCKET HD. BOLT M4X16 (10 PCS.)	1		
20	500-409Z	CORD	1	(CORD ARMOR D8.2)	
21	325-159	PLUNGER HOLDER	2		
22	325-247	BLADE HOLDER	1		
23	325-246	PLUNGER	1		
24	325-248	FELT	1		
25	325-241	SEAL LOCK HEX. SOCKET HD. BOLT M3X8	2		
26	325-158	CONNECTING PIECE	1		
27	325-157	GEAR	1		
28	991-733	WASHER (C)	1		
29	325-155	HOLDER	1		
30	608-VVM	BALL BEARING 608VVC2PS2L	1		
31	360-724E	ARMATURE 220V-230V	1		
32	626-VVM	BALL BEARING 626VVC2PS2L	1		
33	340-631E	STATOR ASS'Y 220V-230V	1	INCLUD. 34	
34	960-356	TERMINAL (A) M3.5 (10 PCS.)	2		

STANDARD ACCESSORIES

ITEM NO.	CODE NO.	DESCRIPTION	NO. USED	REMARKS	
501	943-277	HEX. BAR WRENCH 3MM	1		
502	305-810	TABLE INSERT	1		
503	879-356	JIG SAW BLADES NO. 31 (5 PCS.)	1		

OPTIONAL ACCESSORIES

ITEM NO.	CODE NO.	DESCRIPTION	NO. USED	REMARKS	
601	879-330	JIG SAW BLADES NO. 1 (5 PCS.)	1		
602	879-331	JIG SAW BLADES NO. 2 (5 PCS.)	1		
603	879-332	JIG SAW BLADES NO. 3 (5 PCS.)	1		
604	879-333	JIG SAW BLADES NO. 4 (5 PCS.)	1		
605	879-334	JIG SAW BLADES NO. 5 (5 PCS.)	1		
606	879-335	JIG SAW BLADES NO. 6 (5 PCS.)	1		
607	879-357	JIG SAW BLADE NO. 41 (5 PCS.)	1		
608	879-391	GUIDE FOR JIG SAW	1		

* ALTERNATIVE PARTS

ITEM NO.	CODE NO.	DESCRIPTION	NO. USED	REMARKS	