HITACHI

LIST NO. 0884

ELECTRIC TOOL PARTS LIST

■ CORDLESS DRIVER DRILL

1989·10·30

Model D 10DB

D 10DB(E2)

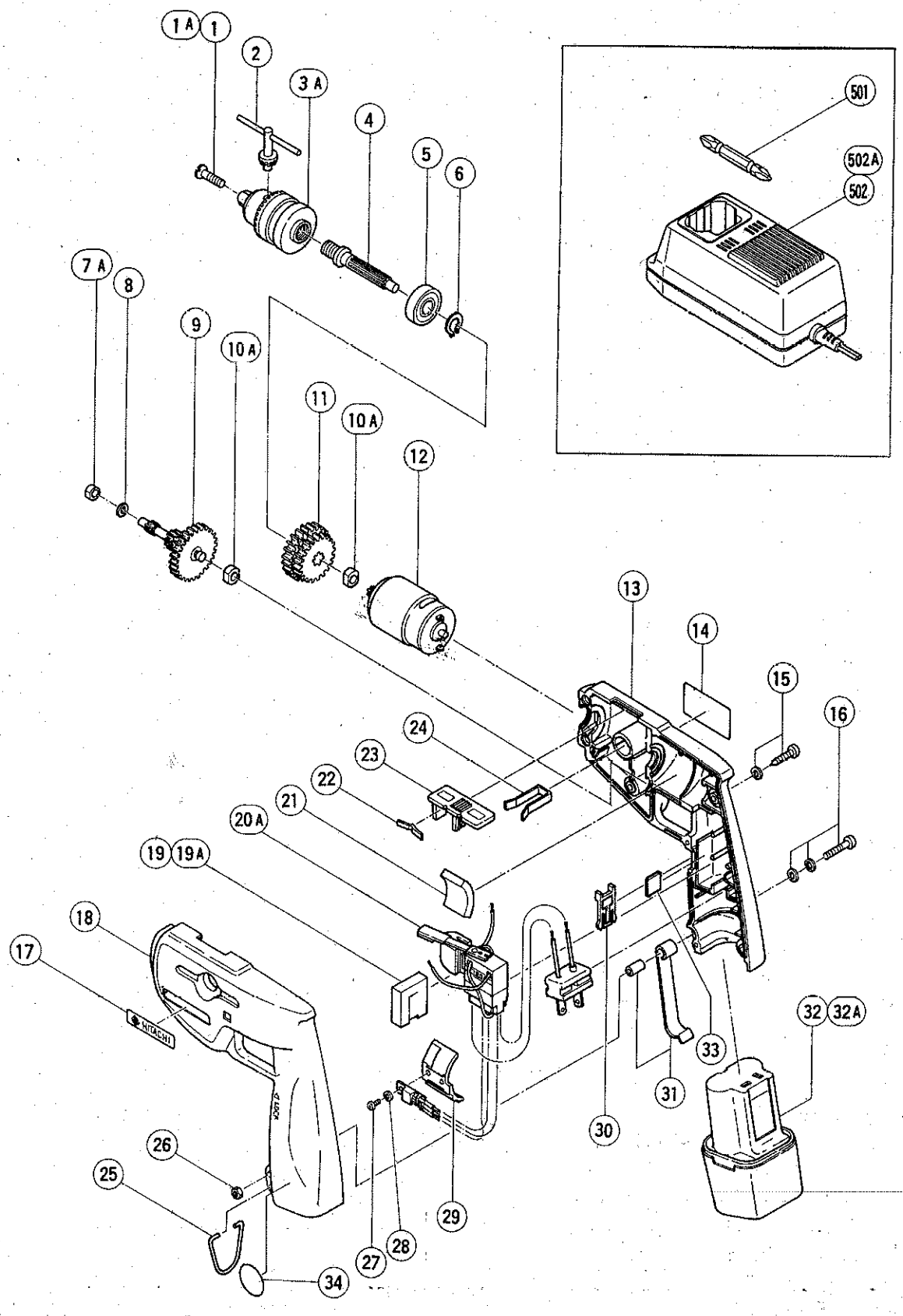

ITEM NO.	CODE NO.	DESCRIPTION	NO. USED	REMARKS	
1	980—836	FLAT HD. SCREW (LEFT HAND) M5X20	1	FOR DRILL CHUCK MODEL 10TLR TILL 9.1986	
1A	992—077	FLAT HD. SCREW (LEFT HAND) M5X17	1	SINCE 10.1986	
2	980—057	CHUCK WRENCH 10TL2	1		
3A	950—292	DRILL CHUCK 10TLRA	1	INCLUD.2	
4	980—843	SPINDLE	1		
5	600—0VV	BALL BEARING 6000VVCMPS2S	1		
6	939—540	RETAINING RING FOR D10 SHAFT (10 PCS.)	1		
7A	994—677	METAL D4X6	1		
8	949—423	WASHER M4 (10 PCS.)	1		
9	980—823	SECOND PINION	1		
10A	997—752	METAL	2		
11	981—348	FINAL GEAR	1		
12	992—071	MOTOR	1		
13	992—076	HOUSING (B)	1		
14		NAME PLATE	1		
15	930—446	TAPPING SCREW (W/WASHER) D4X16	5		
16	992—074	MACHINE SCREW (W/WASHERS) M4X25	1		
17	950—565	HITACHI LABEL	1		
18	992—070	HOUSING (A)	1		
19	992—078	SEAL	1	TILL 11.1987	
19A	980—834	SEAL	1	SINCE 12.1987	
20A	992—080	SWITCH ASS'Y (992072)	1	INCLUD.19A	
21	980—840	CUSHION (A)	1		
22	980—829	SHIFT SPRING	1		
23	980—828	SHIFT KNOB	1		
24	980—837	KEY HOLDER	1		
25	980—838	HOOK	1		
26	949—554	NUT M4 (10 PCS.)	1		
27	949—201	MACHINE SCREW M3X5 (10 PCS.)	1		
28	949—451	SPRING WASHER M3 (10 PCS.)	1		
29	992—073	FIN	1		
30	980—833	SWITCH LOCK	1		
31	980—581	BATTERY CASE HOLDER	1		
* 32	980—576Z	BATTERY B—2 (W/ENGLISH N.P.)	1		
* 32	980—575Z	BATTERY B—2 (W/GERMAN N.P.)	1		
* 32	980—578Z	BATTERY B—2 (W/FRENCH N.P.)	1		
* 32	980—579Z	BATTERY B—2 (W/ENGLISH N.P.)	1	FOR USA	
* 32A	980—582	BATTERY B—2 (W/GERMAN N.P.)	1	FOR SUI	
33	992—079	SPACER	1	TILL 11.1987	
34	987—135	MARK PLATE	1		

* : ALTERNATIVE PARTS

STANDARD ACCESSORIES

D 10DB

ITEM NO.	CODE NO.	DESCRIPTION	NO. USED	REMARKS	
501	955—654	+ DRIVER BIT (A) NO.2 70L	1		
502		CHARGER (MODEL BC—2)	1	TILL REPLACED BY UC 12Y	
502A		CHARGER (MODEL UC 12Y)	1		

OPTIONAL ACCESSORIES

ITEM NO.	CODE NO.	DESCRIPTION	NO. USED	REMARKS	
601	955—657	— DRIVER BIT 3MMX70	1		
602	955—659	— DRIVER BIT 4MMX70	1		
603	955—674	— DRIVER BIT (A) 6MMX70	1		
604	955—655	+ DRIVER BIT (A) NO.3 70L	1		
605	955—670	+ DRIVER BIT (A) NO.1 70L	1		
606	992—075	CASE ASS'Y	1		