HITACHI

LIST NO. E860

ELECTRIC TOOL PARTS LIST

■CORDLESS DRIVER DRILL
Model DN 10DTA

1992・5・20
(E1)

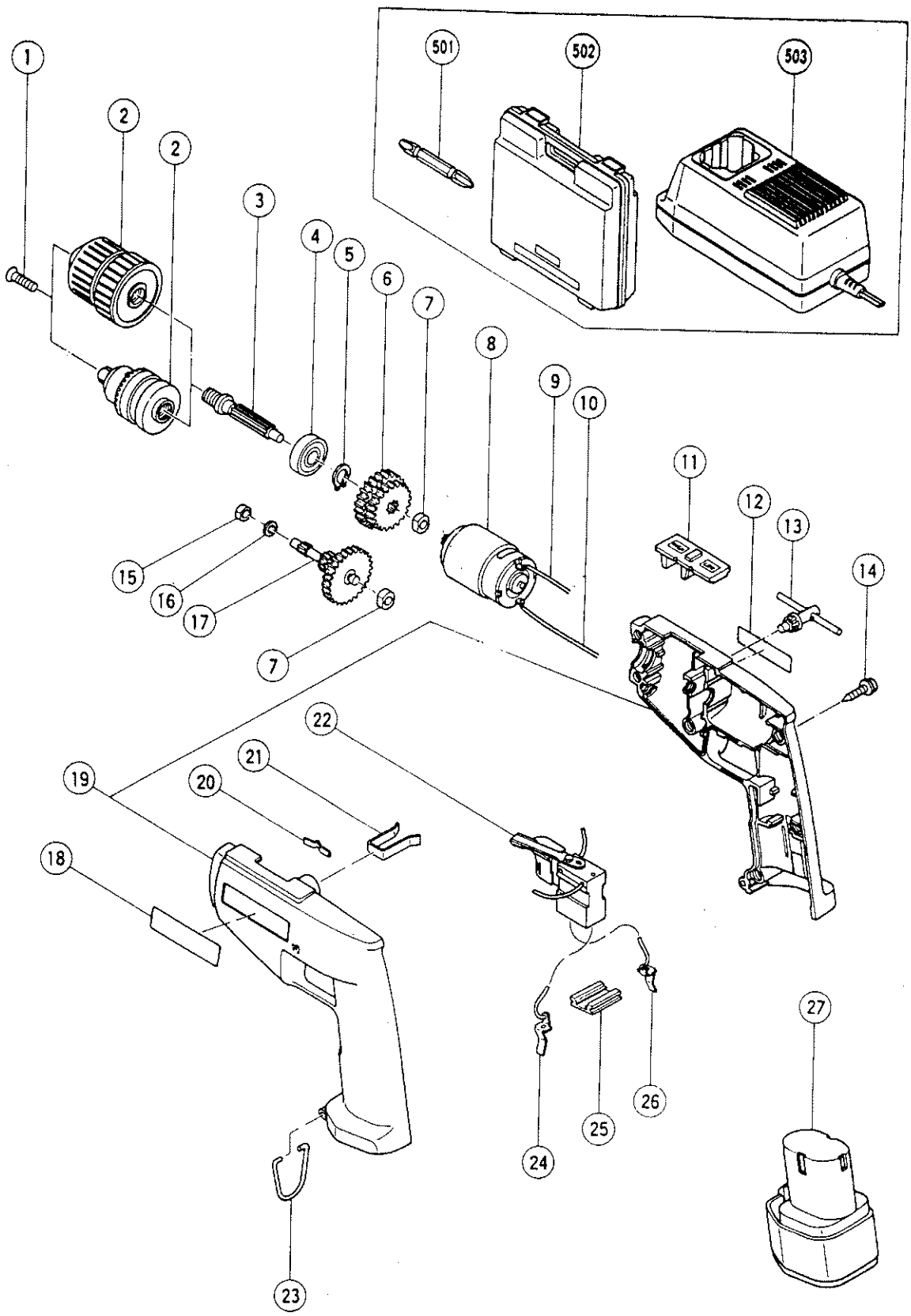

	ITEM NO.	CODE NO.	DESCRIPTION	NO. USED	REMARKS	
	1	992-077	FLAT HD. SCREW (LEFT HAND) M5X17	1		
*	2	950-292	DRILL CHUCK 10TLRA	1	INCLUD.13	
*	2	303-915	DRILL CHUCK 10TLRA – N	1	W/O CHUCK WRENCH	
	3	980-843	SPINDLE	1		
	4	600-0VV	BALL BEARING 6000VVCMPS2S	1		
	5	939-540	QETAINING RING FOR D10 SHAFT (10 PCS.)	1		
	6	981-348	FINAL GEAR	1		
	7	997-752	METAL	2		
	8	992-071	MOTOR	1		
	9	980-845	INTERNAL WIRE (B) 90L (RED)	1		
	10	980-846	INTERNAL WIRE (B) 40L (BLACK)	1		
	11	302-396	SHIFT KNOB	1		
	12		NAME PLATE	1		
	13	980-057	CHUCK WRENCH 10TL2	1		
	14	991-672	TAPPING SCREW (W/WASHER) D3X16	6		
	15	994-677	METAL D4X6	1		
	16	949-423	WASHER M4 (10 PCS.)	1		
	17	980-823	SECOND PINION	1		
	18		HITACHI LABEL	1		
	19	306-056	HOUSING (A).(B) SET	1		
	20	980-829	SHIFT SPRING	1		
	21	980-837	KEY HOLDER	1		
	22	303-913	SWITCH(1P PLUG IN TYPE) W/O LOCK	1		
	23	980-838	HOOK	1		
	24	995-427	TERMINAL	1		
	25	991-666	TERMINAL SUPPORT	1		
	26	991-589	TERMINAL	1		
*	27	306-136	BATTERY EB 7 (W/ENGLISH N.P.)	1		
*	27	306-129	BATTERY EB 7 (W/ENGLISH N.P.)	1	FOR HOL,DEN	
*	27	306-130	BATTERY EB 7 (W/GERMAN N.P.)	1	FOR SUI	
*	27	306-131	BATTERY EB 7 (W/FRENCH N.P.)	1	FOR FRA	
*	27	306-132	BATTERY EB 7 (W/ENGLISH N.P.)	1	FOR USA,CAN	
	27	306-133	BATTERY EB 7 (W/ENGLISH N.P.)	1	FOR SWE	
*	27	306-134	BATTERY EB 7 (W/GERMAN N.P.)	1	FOR BEL	
*	27	306-135	BATTERY EB 7 (W/GERMAN N.P.)	1	FOR FRG,AUT	
*	27	306-283	BATTERY EB 7 (W/ITALIAN N.P.)	1	FOR ITA	

*: ALTERNATIVE PARTS

STANDARD ACCESSORIES

DN 10DTA

ITEM NO.	CODE NO.	DESCRIPTION	NO. USED	REMARKS	
501	955-654	+ DRIVER BIT (A) NO.2 70L	1		
502	302-361	CASE	1		
503		CHARGER UC 12Y	1		

OPTIONAL ACCESSORIES

ITEM NO.	CODE NO.	DESCRIPTION	NO. USED	REMARKS	
601	955-657	− DRIVER BIT (A) 3MMX70L	1		
602	955-659	− DRIVER BIT (A) 4MMX70L	1		
603	955-674	− DRIVER BIT (A) 6MMX70L	1		
604	955-655	+ DRIVER BIT (A) NO.3 70L	1		
605	955-670	+ DRIVER BIT (A) NO.1 70L	1		

* : ALTERNATIVE PARTS