LIST NO. K896

ELECTRIC TOOL PARTS LIST

■ CORDLESS DRIVER DRILL

2019· 1 ·10

Model DS 12DD

(E1)

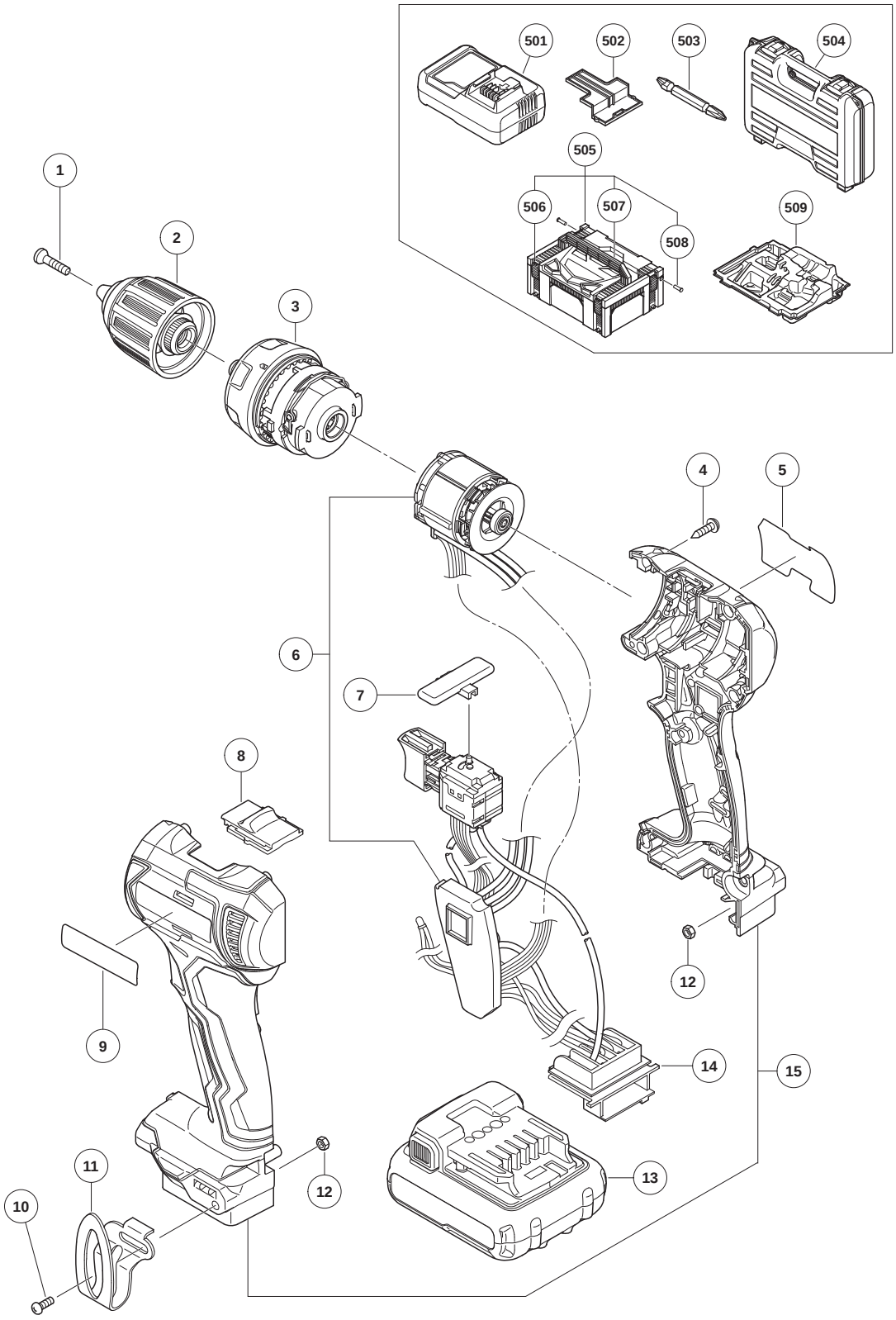

Koki Holdings Co., Ltd.

PARTS

ITEM NO.	CODE NO.	DESCRIPTION	NO. USED	REMARKS	
1	337426	LEFT-HAND HEXALOBULAR M5	1		
2	337390	DRILL CHUCK 10TLRM-N (W/O CHUCK WRENCH)	1		
3	374383	GEAR BOX (A)	1		
4	313687	TAPPING SCREW (W/FLANGE) D3 X 16 (BLACK)	8		
5		NAME PLATE	1		
6	374381	MOTOR SET	1		
7	374399	PUSHING BUTTON	1		
8	374382	SHIFT KNOB	1		
9		BRAND LABEL	1		
10	337357	TRUSS HD. SCREW M4 (BLACK)	1		
11	372229	HOOK	1		
12	327002	LOCK NUT M4 (BLACK)	2		
13	374404	BATTERY BSL 1240M (EUROPE)	2	INCLUD.502	
14	374387	BATTERY TERMINAL	1		
15	374379	HOUSING (A).(B) SET	1		

STANDARD ACCESSORIES

	ITEM NO.	CODE NO.	DESCRIPTION	NO. USED	REMARKS	
	501		CHARGER (MODEL UC 12SL)	1		
	502	374778	BATTERY COVER	1		
	503	983006	+ DRIVER BIT NO.2 65L	1		
*	504	336642	CASE	1		
*	505	336471	CASE ASS'Y (STACKABLE 2)	1	INCLUD.506-508	
*	506	336472	LATCH	4		
*	507	336473	HANDLE	1		
*	508	336474	HINGE	2		
*	509	374779	INNER TRAY	1		

*ALTERNATIVE PARTS