Hitachi Power Tools

LIST NO. H855

ELECTRIC TOOL PARTS LIST

■ CORDLESS MINI GRINDER 2010·1·19

Model GP 10DL (E1)

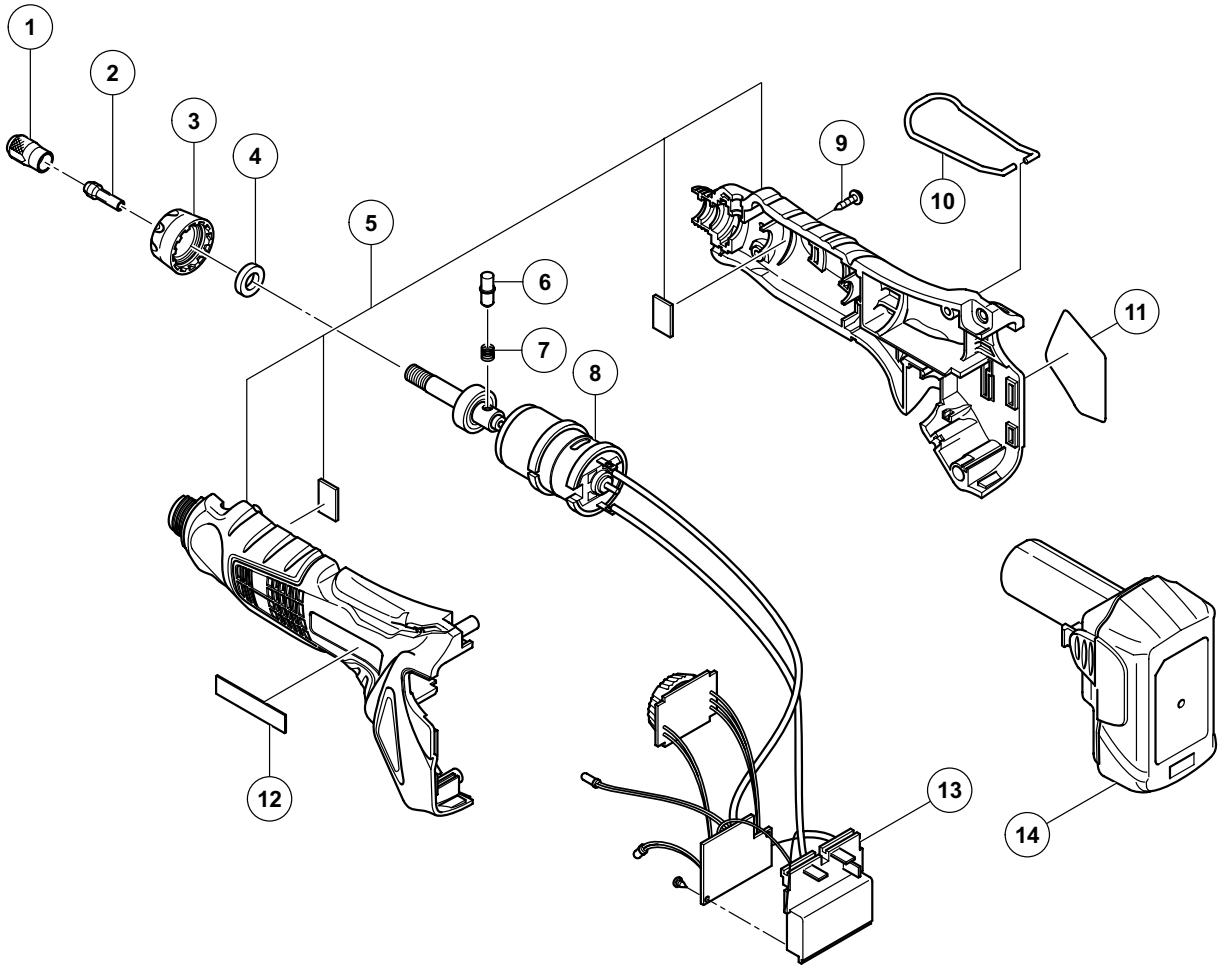

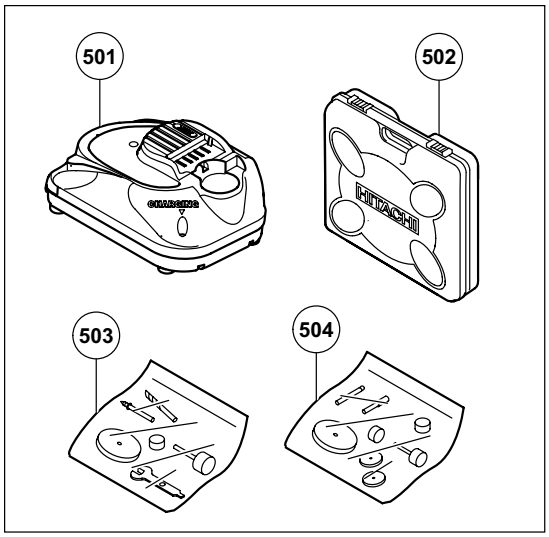

PARTS

ITEM NO.	CODE NO.	DESCRIPTION	NO. USED	REMARKS	
1	331-978	COLLET NUT	1		
2	331-969	COLLET D3	1		
3	331-976	CAP	1		
4	331-970	FELT	1		
5	332-519	HOUSING (A). (B) SET	1		
6	331-971	LOCK PIN	1		
7	319-267	SPRING	1		
8	331-973	MOTOR DC 10.8V	1		
9	313-687	TAPPING SCREW (W/FLANGE) D3 X 16 (BLACK)	5		
10	331-972	HOOK	1		
11		NAME PLATE	1		
12	330-719	HITACHI LABEL	1		
13	331-977	CONTROLLER	1		
* 14	331-067	BATTERY BCL 1015 (EUROPE, AUS, NZL)	2		
* 14	331-065	BATTERY BCL 1015 (USA, CAN)	1		

STANDARD ACCESSORIES

ITEM NO.	CODE NO.	DESCRIPTION	NO. USED	REMARKS	
501		CHARGER (MODEL UC 10SFL)	1		
502	332-491	CASE	1		
503	332-492	ACCESSORIES SET (A)	1		
504	332-493	ACCESSORIES SET (B)	1		

*ALTERNATIVE PARTS

Printed in Japan 01 - 10
(100119N)