Hitachi Power Tools

LIST NO. G897

ELECTRIC TOOL PARTS LIST

■ CHARGER

2008·2·7

Model UC 10SFL

(E1)

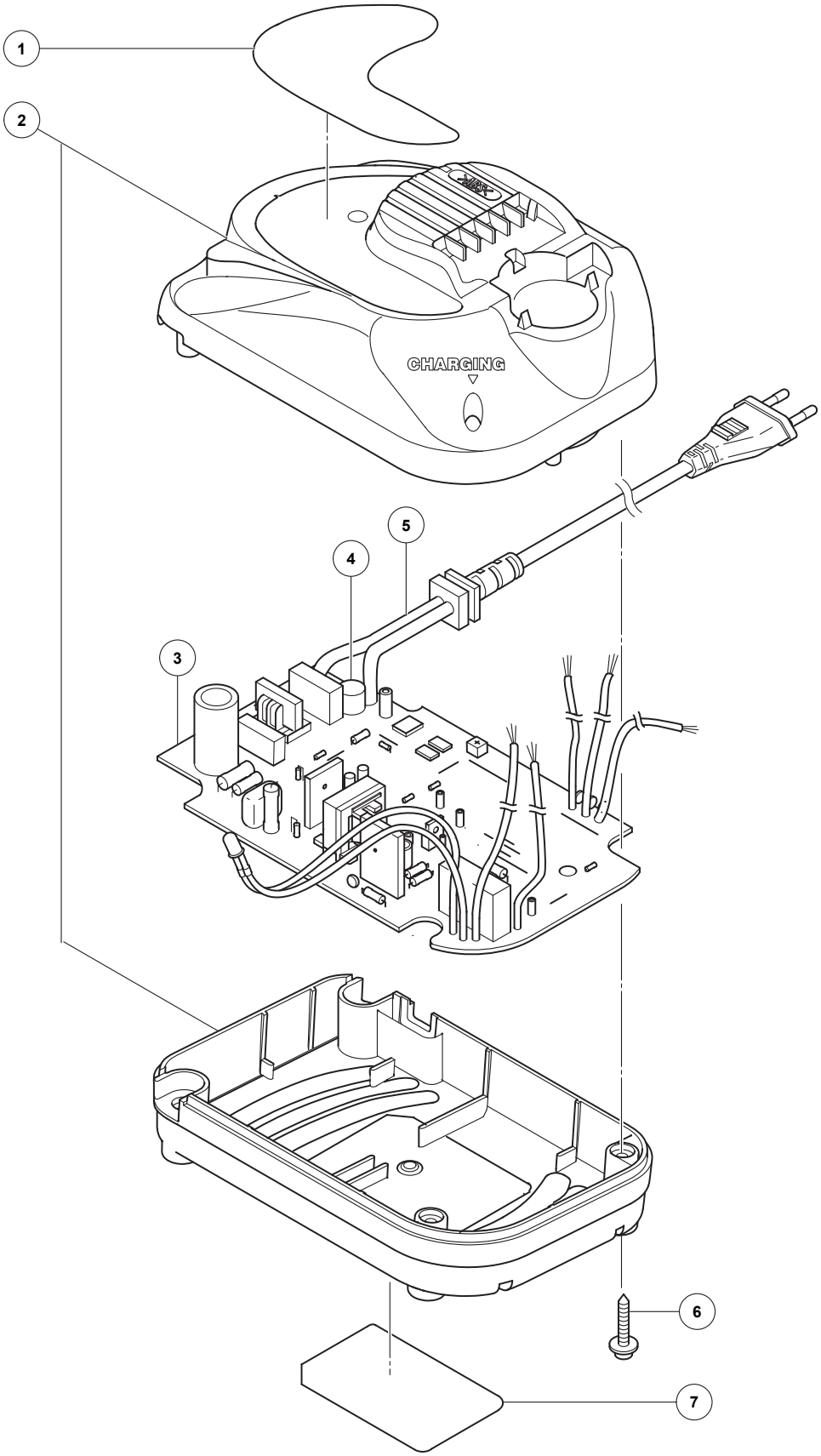

	ITEM NO.	CODE NO.	DESCRIPTION	NO. USED	REMARKS	
	1	329-598	HITACHI LABEL	1		
	2	329-599	CASE (A). (B) SET	1		
*	3	329-600	PRINTED CIRCUIT BOARD ASS'Y 110V-120V	1	INCLUD. 4	
*	3	329-601	PRINTED CIRCUIT BOARD ASS'Y 220V-240V	1	INCLUD. 4	
	4	324-736	FUSE (250V-3.15A)	1		
*	5	326-213	CORD (EUROPE)	1		
*	5	326-212	CORD (U.K)	1	FOR GBR	
*	5	326-211	CORD (USA)	1	FOR USA, CAN	
*	5	324-742	CORD	1	FOR AUS	
*	5	329-602	CORD	1	FOR CHN	
*	5	324-740	CORD	1	FOR TPE	
*	5	324-743	CORD	1	FOR THA	
	6	326-358	TAPPING SCREW (W/FLANGE) D3X18	4		
	7		NAME PLATE	1		