Hitachi Power Tools

LIST NO. H803

ELECTRIC TOOL PARTS LIST

■ CHARGER

2008·3·5

Model UC 3SML

(E1)

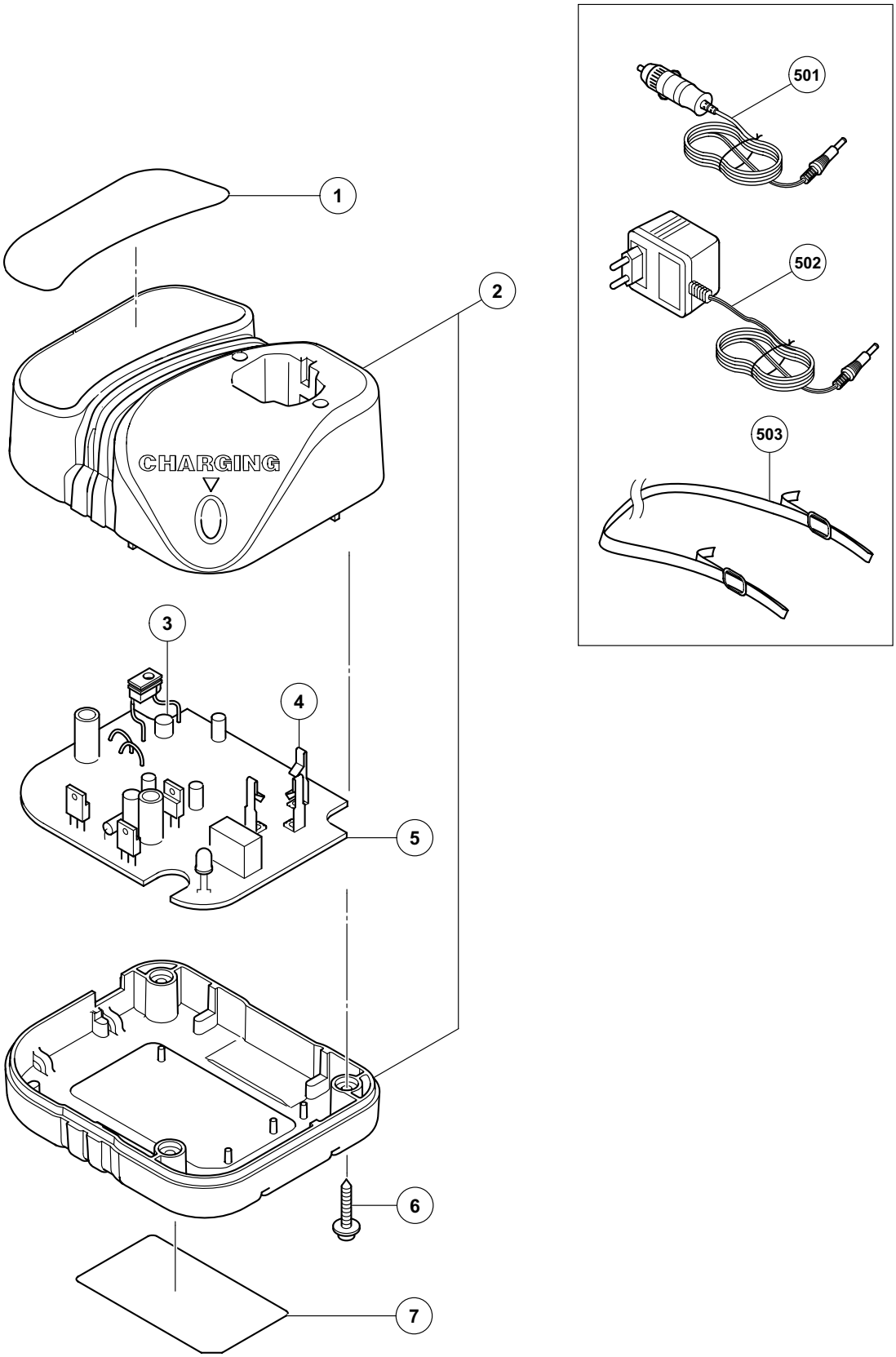

PARTS

	ITEM NO.	CODE NO.	DESCRIPTION	NO. USED	REMARKS	
*	1	329-878	CAUTION PLATE	1		
*	1	329-879	CAUTION PLATE	1	FOR USA, CAN	
	2	329-880	CASE (A). (B) SET	1		
	3	329-857	FUSE (3.15A) EUROPE, USA, CAN	1		
	4	324-900	TERMINAL (A)	3		
	5	329-881	PRINTED CIRCUIT BOARD ASS'Y	1	INCLUD. 3, 4	
	6	326-358	TAPPING SCREW (W/FLANGE) D3X18	3		
	7		NAME PLATE	1		

STANDARD ACCESSORIES

	ITEM NO.	CODE NO.	DESCRIPTION	NO. USED	REMARKS	
*	501	328-526	DC-CORD	1		
*	501	329-882	DC-CORD	1	FOR USA, CAN	
*	502	329-885	AC-ADAPTER (EURO)	1		
*	502	329-884	AC-ADAPTER (U.K)	1		
*	502	329-883	AC-ADAPTER (USA)	1		
	503	328-527	STRAP	1		

*ALTERNATIVE PARTS

Printed in Japan 3 - 08
(080305N)