Hitachi Power Tools

LIST NO. J880

ELECTRIC TOOL PARTS LIST

■ CORDLESS FAN

2014·4·29

Model UF 18DSAL

(E1)

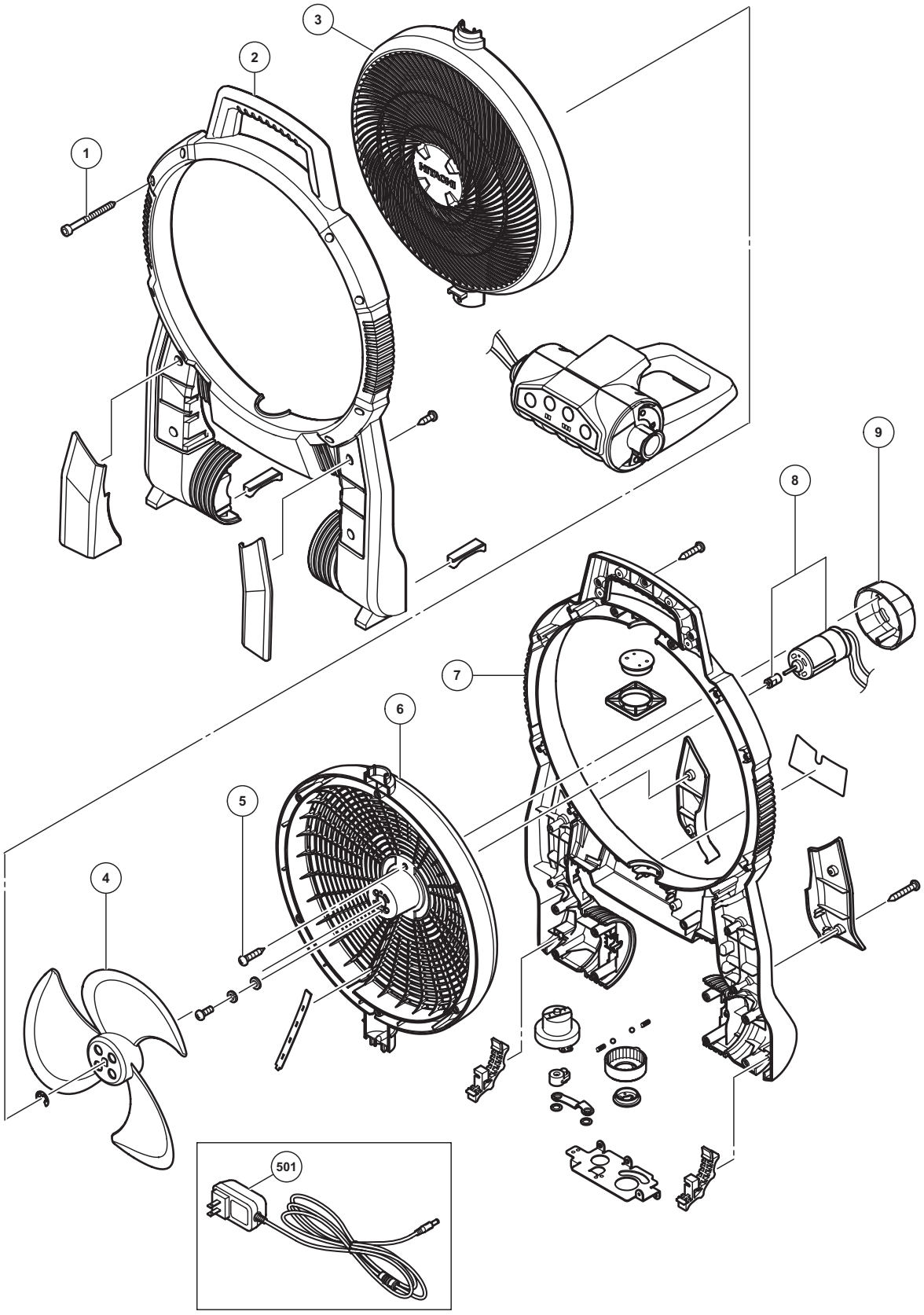

PARTS

ITEM NO.	CODE NO.	DESCRIPTION	NO. USED	REMARKS	
1	336177	HEX. SOCKET TAPPING SCREW	8		
2	337249	FAN FRONT CABINET	1		
3	337248	FAN FRONT GRILL	1		
4	336174	FAN BLADE	1		
5	336180	TAPPING SCREW D3	2		
6	337251	FAN REAR GRILL	1		
7	337250	FAN REAR CABINET	1		
8	336179	DC MOTOR	1		
9	336178	MOTOR COVER	1		

STANDARD ACCESSORIES

	ITEM NO.	CODE NO.	DESCRIPTION	NO. USED	REMARKS	
*	501	336182	AC-ADAPTER (EUROPE)	1		
*	501	336183	AC-ADAPTER (UK)	1		
*	501	336184	AC-ADAPTER (AUS)	1		

*ALTERNATIVE PARTS

Printed in Japan 4 - 14
(140429N)