Hitachi Power Tools

LIST NO. H861

ELECTRIC TOOL PARTS LIST

■ CORDLESS ANGLE IMPACT DRIVER 2010·4·8

Model WH 14DCL (E1)

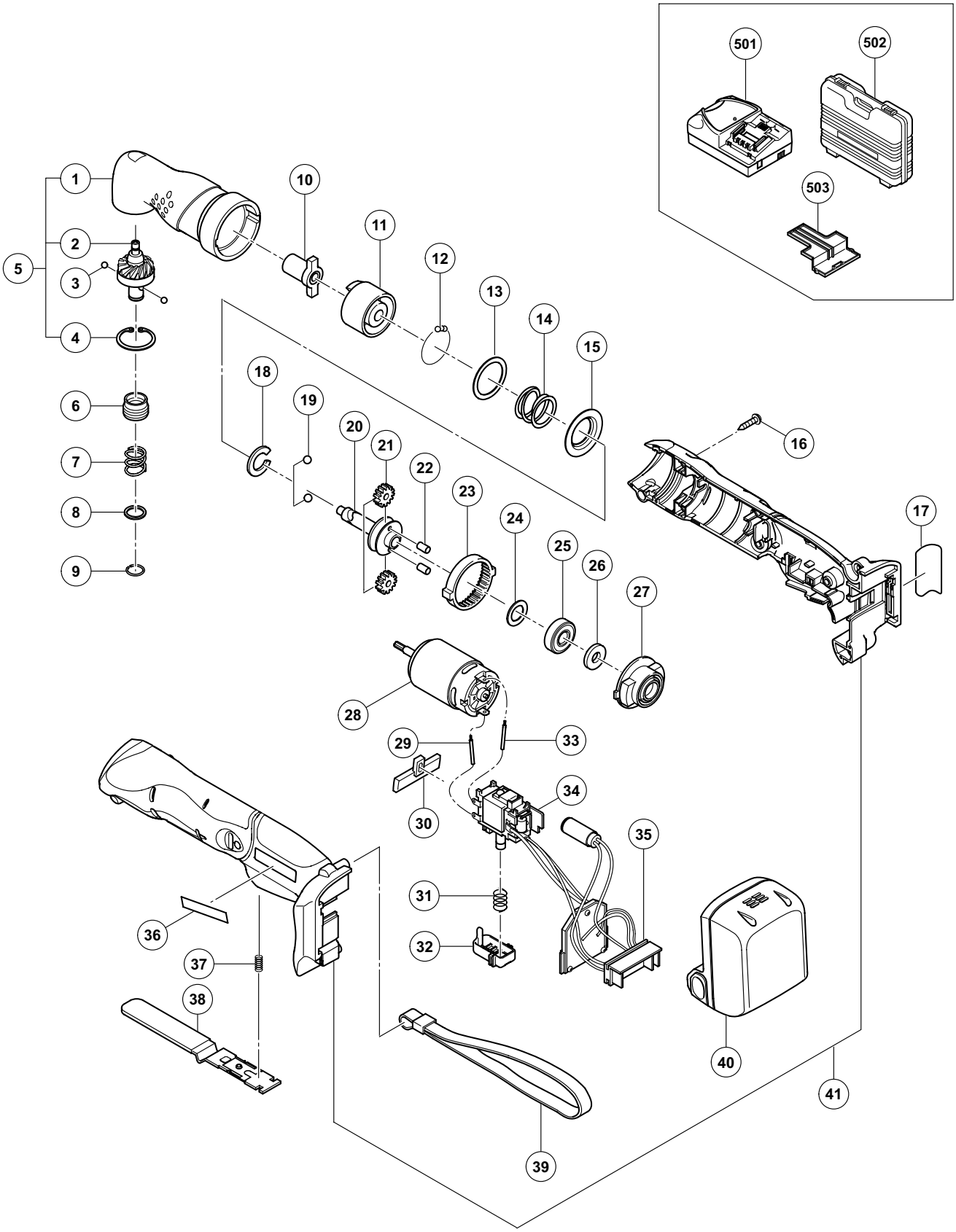

ITEM NO.	CODE NO.	DESCRIPTION	NO. USED	REMARKS	
1	329-672	HAMMER CASE	1		
2	330-624	FINAL GEAR	1		
3	319-535	STEEL BALL D3.5 (10 PCS.)	2		
4	939-555	RETAINING RING FOR D28 HOLE (10 PCS.)	1		
5	330-623	HAMMER CASE SET	1	INCLUD. 1, 2, 4	
6	322-717	GUIDE SLEEVE (D)	1		
7	330-617	GUIDE SPRING (C)	1		
8	330-618	WASHER (D)	1		
9	330-619	RETAINING RING	1		
10	329-660	ANVIL (B)	1		
11	329-665	HAMMER (A)	1		
12	959-148	STEEL BALL D3.175 (10 PCS.)	24		
13	329-617	WASHER (J)	1		
14	329-658	HAMMER SPRING	1		
15	329-614	WASHER (S)	1		
16	301-653	TAPPING SCREW (W/FLANGE) D4 X 20 (BLACK)	8		
17		NAME PLATE	1		
18	329-613	STOPPER (B)	1		
19	959-149	STEEL BALL D4.76 (10 PCS.)	2		
20	329-659	SPINDLE	1		
21	329-611	IDLE GEAR SET (2 PCS.)	2		
22	329-612	NEEDLE ROLLER (A)	2		
23	329-610	RING GEAR (E)	1		
24	319-911	WASHER (E)	1		
25	690-1VV	BALL BEARING 6901VVCMPS2L	1		
26	329-518	FELT	1		
27	329-657	INNER COVER (D)	1		
28	329-669	MOTOR	1		
29	329-671	INTERNAL WIRE (BLACK) 57L	1		
30	329-656	PUSHING BUTTON	1		
31	330-621	SPRING (S)	1		
32	330-622	TRIGGER	1		
33	329-670	INTERNAL WIRE (RED) 36L	1		
34	330-853	SWITCH	1		
35	331-808	CONTROLLER TERMINAL SET	1		
36		HITACHI LABEL	1		
37	329-655	SPRING	1		
38	329-654	PADDLE LEVER	1		
39	306-952	STRAP (BLACK)	1		
40	329-083	BATTERY BSL 1430 (EUROPE, AUS, NZL)	2		
41	331-807	HOUSING (A). (B) SET	1		

STANDARD ACCESSORIES

ITEM NO.	CODE NO.	DESCRIPTION	NO. USED	REMARKS	
501		CHARGER (MODEL UC 18YRSL)	1		
502	329-674	CASE	1		
503	329-897	BATTERY COVER	1		

OPTIONAL ACCESSORIES

ITEM NO.	CODE NO.	DESCRIPTION	NO. USED	REMARKS	
601	321-823	DRILL CHUCK AND ADAPTER SET	1	INCLUD. 616, 618	
602	309-922	GREASE FOR IMPACT DRIVER (500G)	1		
603	992-671	+ DRIVER BIT (B) NO.2 50L	1		
604	992-672	+ DRIVER BIT (B) NO.3 50L	1		
605	996-177	NON-MAGNETIC HEX. SOCKET 8MM 65L	1		
606	985-329	NON-MAGNETIC HEX. SOCKET 10MM 65L	1		
607	996-178	NON-MAGNETIC HEX. SOCKET 12MM 65L	1		
608	996-179	NON-MAGNETIC HEX. SOCKET 13MM 65L	1		
609	996-180	NON-MAGNETIC HEX. SOCKET 14MM 65L	1		
610	996-185	NON-MAGNETIC HEX. SOCKET 15MM 65L	1		
611	996-181	NON-MAGNETIC HEX. SOCKET 16MM 65L	1		
612	996-182	NON-MAGNETIC HEX. SOCKET 17MM 65L	1		
613	996-186	NON-MAGNETIC HEX. SOCKET 19MM 65L	1		
614	996-197	HEX. SOCKET (LONG) 21MM X 166L	1		
615	996-184	BIT PIECE	1		
616	987-575	CHUCK WRENCH FOR 10VLB-D, 10VLR-D	1		
617	930-119	CHUCK WRENCH 6.5G	1		
618	307-543	CHUCK ADAPTER	1		

*ALTERNATIVE PARTS

ITEM NO.	CODE NO.	DESCRIPTION	NO. USED	REMARKS	