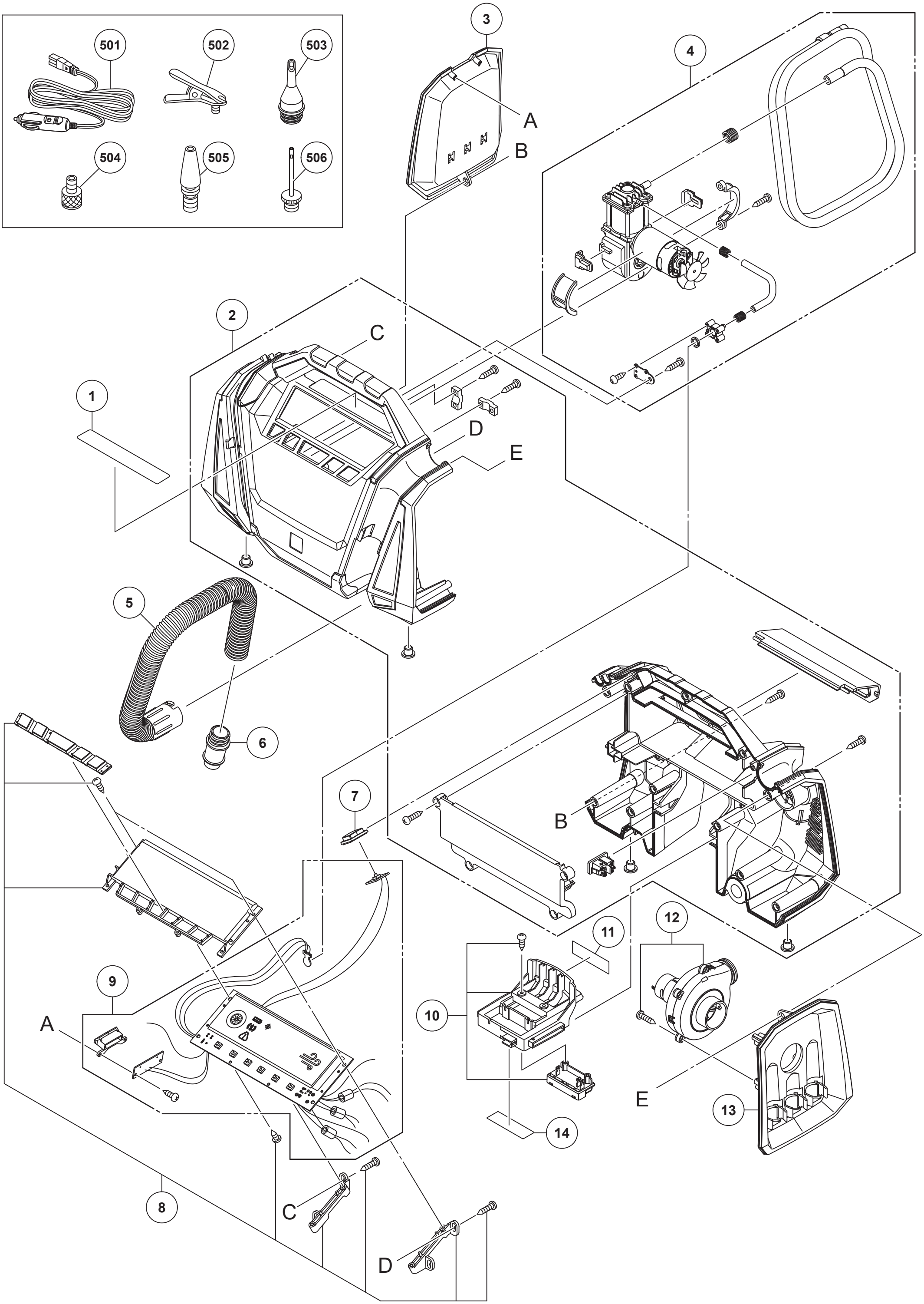

MODEL
UP18DA

Rev.1

HiKOKI

OEM UP18DA

Item No.	Code No.	Description	No. Used	Remarks
1		POP LABEL	1	
*2	381439	HOUSING SET	1	
*2	381439M	HOUSING SET	1	FOR USA,CAN
3	381441	LEFT COVER	1	
4	381440	COMPRESSOR SET	1	
5	381444	BELLOWS	1	
6	381445	LARGE HIGH VOLUME ADAPTER	1	
7	381443	LED SWITCH BUTTON	1	
*8	381436	SCREEN COVER SET	1	
*8	381595	SCREEN COVER SET	1	FOR USA,CAN
*9	381435	MAIN PCB SET (A)	1	
*9	381594	MAIN PCB SET (A)	1	FOR USA,CAN
10	381437	BATTERY HOLDER SET	1	
11		NAME PLATE	1	
12	381438	FAN MOTOR SET	1	
13	381442	RIGHT COVER	1	
14		NAME PLATE B	1	
		STANDARD ACCESSORIES		
*501	381451	12V DC ADAPTER	1	
*501	381596	12V DC ADAPTER	1	FOR USA,CAN
*502	381447	DUNLOP VALVE ADAPTER	1	FOR EUROPE
503	381446	HIGH VOLUME TAPERED NOZZLE	1	
504	381450	PRESTA VALVE ADAPTER	1	
505	381449	HIGH PRESSURE TAPERED NOZZLE	1	
506	381448	BALL NEEDLE	1	

* ALTERNATIVE PARTS