HITACHI

LIST NO. 0131

ELECTRIC TOOL PARTS LIST

■DRILL STAND
Model D10-DS

1994・8・4
(E3)

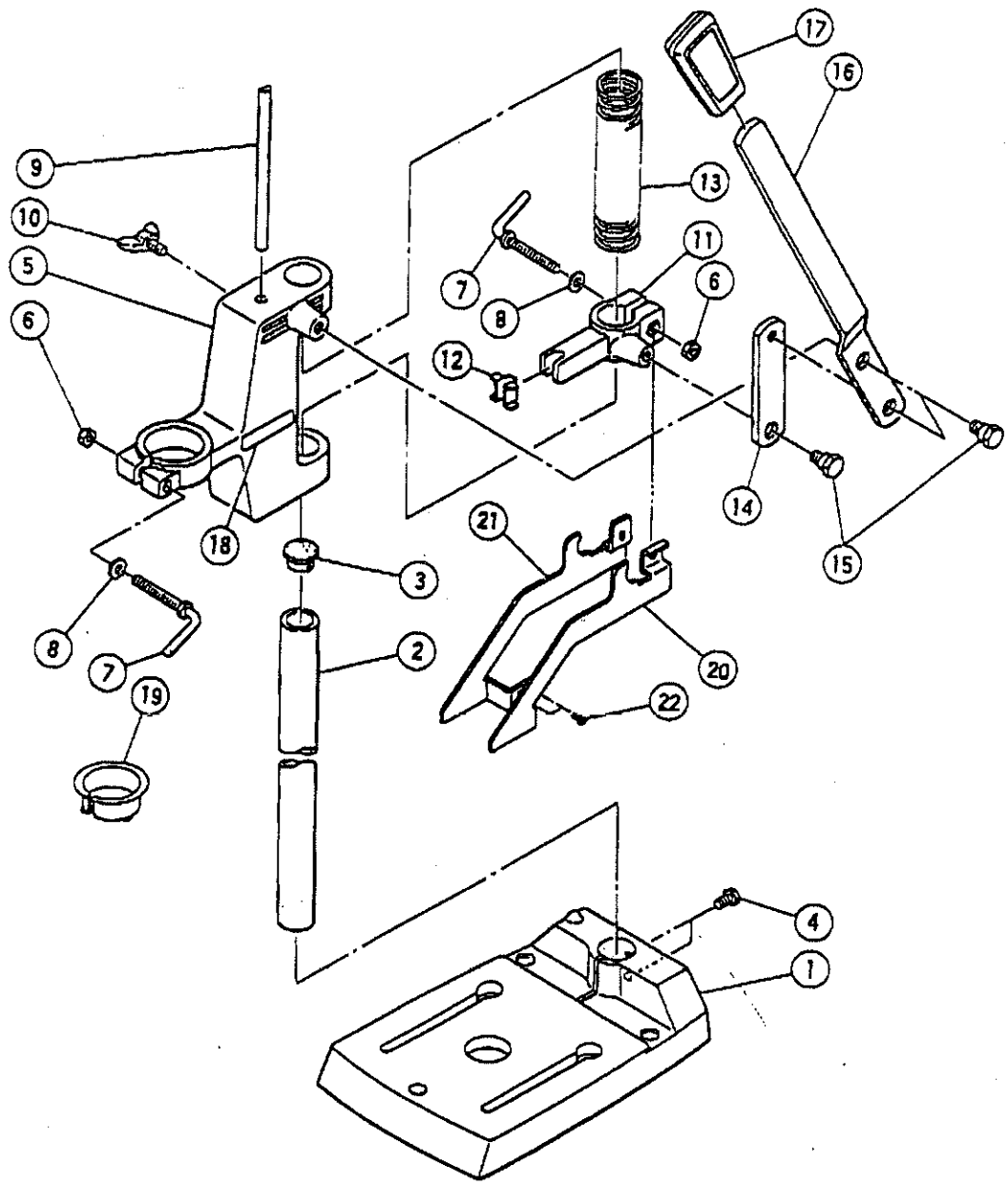

PARTS

ITEM NO.	CODE NO.	DESCRIPTION	NO. USED	REMARKS	
1	960-140	BASE	1		
2	960-141	COLUMN (D25X435)	1		
3	960-142	CAP	1		
4	949-611	BOLT M6X12 (10 PCS.)	2		
5	960-143Z	HEAD	1		
6	949-558	NUT M6 (10 PCS.)	2		
7	960-144	CLAMP SCREW	2		
8	949-425	WASHER M6 (10 PCS.)	2		
9	960-145	DEPTH BAR	1		
10	949-404	WING BOLT M6X20 (10 PCS.)	1		
11	960-146	STOPPER	1		
12	960-147	SLIDE WASHER	1		
13	960-148	SPRING	1		
14	960-149	ARM	1		
15	960-150	SPECIAL BOLT M8	3		
16	960-151	HANDLE	1		
17	960-152	GRIP	1		
18	960-157Z	HITACHI LABEL	1		
19	954-270	SLEEVE	1	FOR NZL	
* 20	960-154	CLAMP (A)	1	FOR NZL	
* 21	960-155	CLAMP (B)	1	FOR NZL	
* 22	949-214	MACHINE SCREW M4X6 (10 PCS.)	2	FOR NZL	

OPTIONAL ACCESSORIES

ITEM NO.	CODE NO.	DESCRIPTION	NO. USED	REMARKS	
601	954-270	SLEEVE	1	FOR MOUNTING DIA. 42MM	
602	960-158	COLUMN (D25X575)	1		

*: ALTERNATIVE PARTS