HITACHI

LIST NO. E829

ELECTRIC TOOL PARTS LIST

■CORDLESS IMPACT DRILL
Model DV 10DA

1993・2・2
(E2)

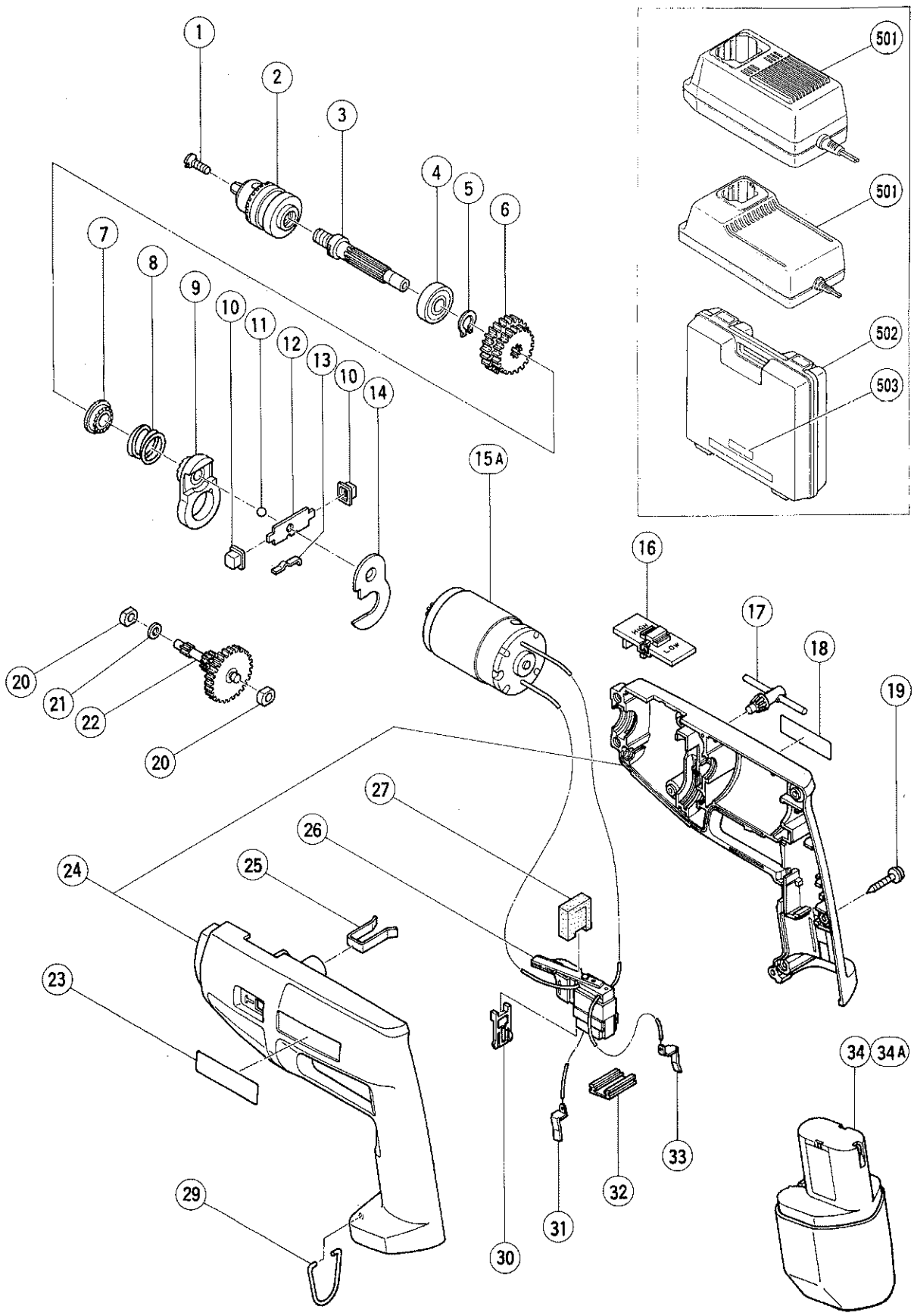

	ITEM NO.	CODE NO.	DESCRIPTION	NO. USED	REMARKS	
	1	992-077	FLAT HD. SCREW (LEFT HAND) M5X17	1		
	2	950-292	DRILL CHUCK 10TLRA	1	INCLUD.17	
	3	300-021	SPINDLE	1		
	4	600-1DD	BALL BEARING 6001DDUCMPS2S	1		
	5	939-542	RETAINING RING FOR D12 SHAFT (10 PCS.)	1		
	6	982-444	FINAL GEAR	1		
	7	300-022	RATCHET	1		
	8	300-023	SPRING (A)	1		
	9	987-074	HOLDER	1		
	10	963-225	CHANGE KNOB	2		
	11	959-149	STEEL BALL D4.76 (10 PCS.)	1		
	12	963-224	CHANGE PLATE	1		
	13	963-226	SPRING (A)	1		
	14	987-075	PLATE	1		
	15A	305-081	MOTOR	1		
	16	300-025	SHIFT KNOB	1		
	17	980-057	CHUCK WRENCH 10TL2	1		
	18		CAUTION PLATE	1		
	19	982-095	TAPPING SCREW (W/WASHER) D4X20	7		
	20	997-752	METAL	2		
	21	949-425	WASHER M6 (10 PCS.)	1		
	22	982-443	SECOND PINION	1		
	23		NAME PLATE	1		
	24	300-026	HOUSING (A).(B) SET	1		
	25	980-837	KEY HOLDER	1		
	26	995-426	SWITCH (2P PLUG IN TYPE) W/O LOCK	1		
	27	980-834	SEAL	1		
	29	980-838	HOOK	1		
	30	980-833	SWITCH LOCK	1		
	31	995-427	TERMINAL	1		
	32	991-666	TERMINAL SUPPORT	1		
	33	995-428	TERMINAL	1		
*	34	300-002	BATTERY EB 12 (W/ENGLISH N.P.)	1		
*	34	300-004	BATTERY EB 12 (W/ENGLISH N.P.)	1	FOR USA,CAN	
*	34	300-001	BATTERY EB 12 (W/GERMAN N.P.)	1		
*	34	300-003	BATTERY EB 12 (W/FRENCH N.P.)	1		
*	34A	302-758	BATTERY EB 12 (W/ENGLISH N.P.)	1	FOR HOL,DEN,SWE,SUI,NOR	
*	34A	302-973	BATTERY EB 12 (W/GERMAN N.P.)	1	FOR BEL	
*	34A	306-200	BATTERY EB 12 (W/ITALIAN N.P.)	1	FOR ITA	

*: ALTERNATIVE PARTS

STANDARD ACCESSORIES

ITEM NO.	CODE NO.	DESCRIPTION	NO. USED	REMARKS	
501		CHARGER (MODEL UC 12Y)	1	DEPENDING ON ORDER SPEC.	
501		CHARGER (MODEL UC 12YA)	1	DEPENDING ON ORDER SPEC.	
502	303-346	CASE	1		
503		HITACHI LABEL	1		
518	301-833	ADAPTER (W/GERMAN CAUTION PLATE)	1		

OPTIONAL ACCESSORIES

ITEM NO.	CODE NO.	DESCRIPTION	NO. USED	REMARKS	
601	931-851	DRILL BIT (B) D8.5X100	1		
602	931-852	DRILL BIT (B) D8.0X100	1		
603	931-853	DRILL BIT (B) D9.5X120	1		
604	931-854	DRILL BIT (B) D10.0X120	1		
605	955-670	+ DRIVER BIT (A) NO.1 70L	1		
606	955-654	+ DRIVER BIT (A) NO.2 70L	1		

*: ALTERNATIVE PARTS