Hitachi Power Tools

LIST NO. H801

ELECTRIC TOOL PARTS LIST

■ CORDLESS COMBO KIT

2008·2·25

Model KC 18DK

(E1)

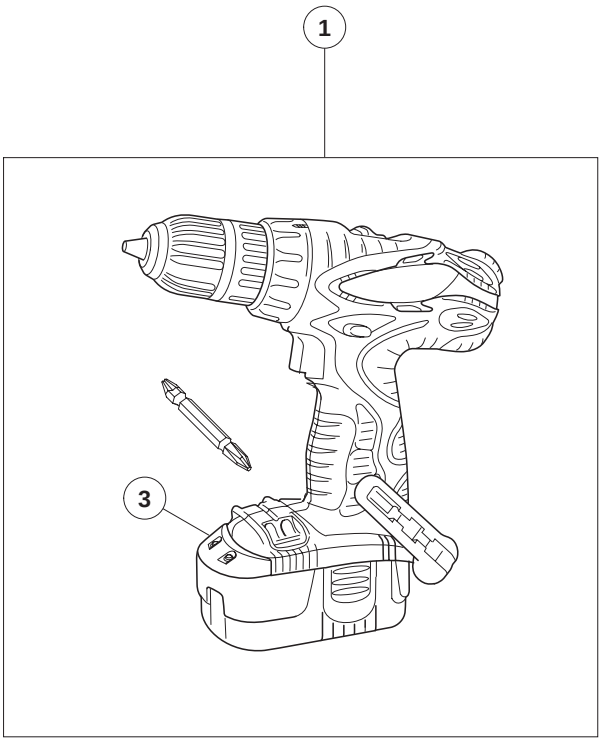

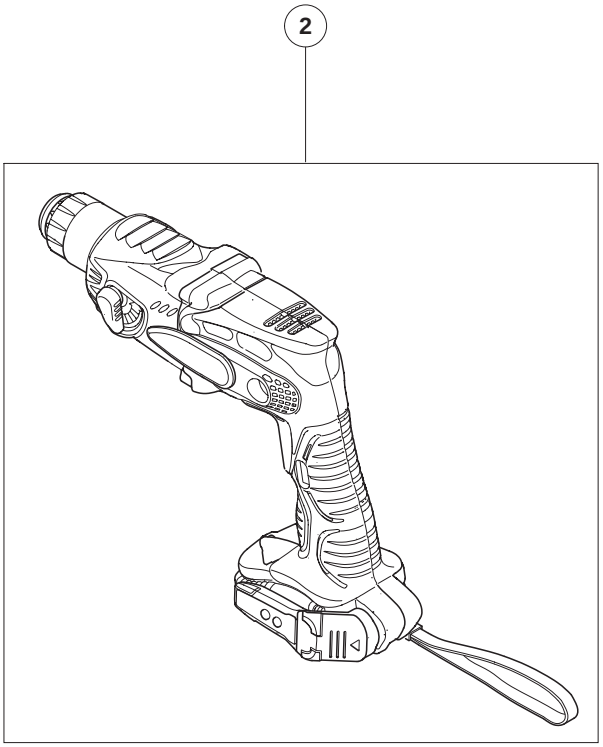

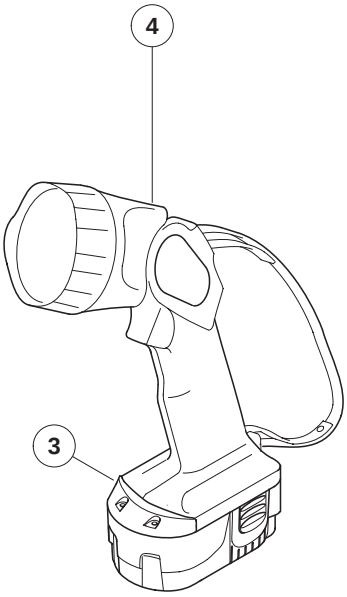

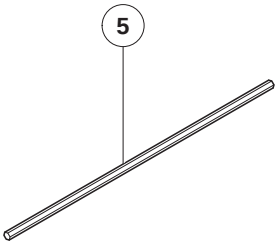

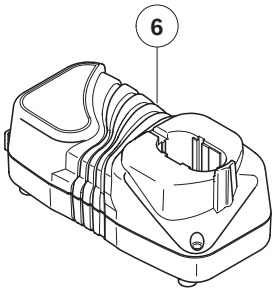

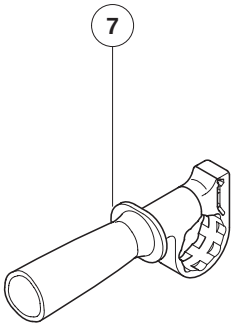

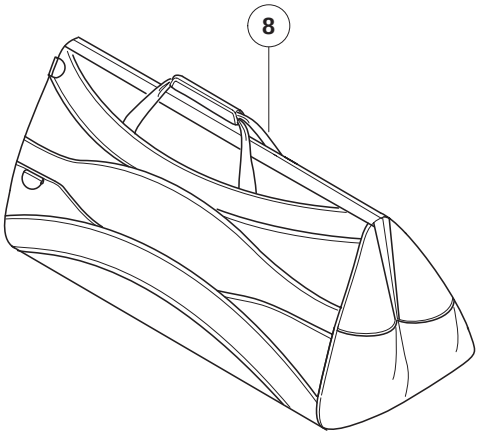

ITEM NO.	CODE NO.	DESCRIPTION	NO. USED	REMARKS	
1		MODEL DS 18DVF3 CORDLESS DRIVER DRILL	1		
2		MODEL DH 18DMR CORDLESS ROTARY HAMMER	1		
3	322-880	BATTERY EB 1820L (EUROPE, AUS, NZL)	2		
4		MODEL UB 18D CORDLESS TORCHLIGHT	1		
5	303-709	DEPTH GAUGE	1		
6		MODEL UC 18YG CHARGER	1		
7	324-548	SIDE HANDLE	1		
8	329-081	BAG	1		