S23 01	TED-25LPF CYLINDER/PISTON/CRANK SHAFT

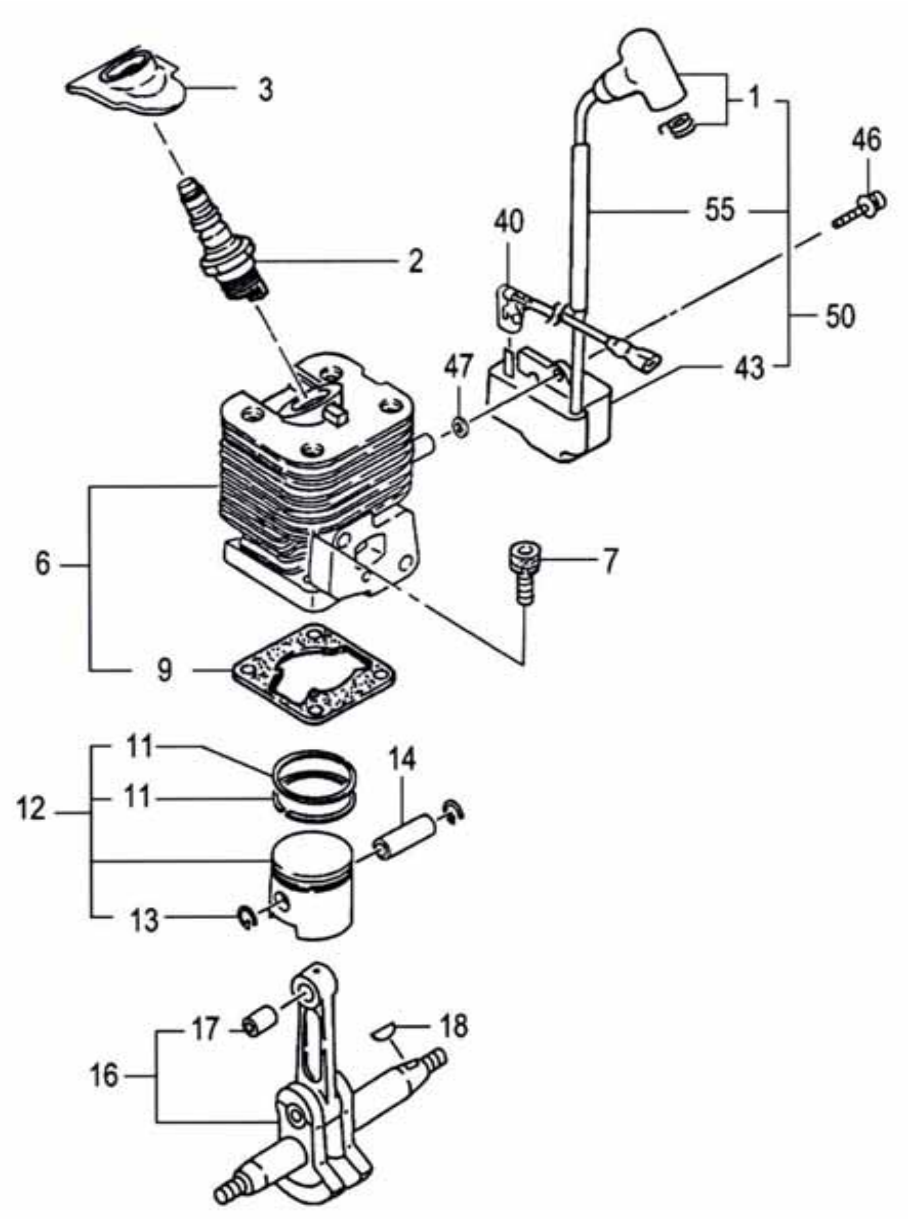

Parts List

Ref.	Part No.	Description	Q'ty	Serial No.
001	157-01680-90	PLUG CAP ASS'Y	1	
002	018-00555-20	SPARK PLUG, RCJ8Y	1	
003	255-01680-20	SPARK PLUG RUBBER COVER	1	
006	001-03002-90	CYLINDER SET	1	
007	994-61050-184	HEX. HOLE BOLT 5X18/S	4	
009	017-03002-21	CYLINDER GASKET	1	
011	041-01601-20	PISTON RING	2	
012	030-01680-90	PISTON SET	1	
013	039-00000-20	PISTON PIN CIRCLIP	2	
014	037-01700-20	PISTON PIN	1	
016	046-03002-80	CRANK SHAFT COMP.	1	
017	999-62091-325	NEEDLE BRG F-910 1.4X8.5	1	
018	068-10100-20	WOOD-RUFF KEY 3X13X4.5	1	
040	178-03002-80	CORD, B 140M	1	
043	167-21743-80	IGNITION COIL COMP.	1	
046	994-16040-186	HIGH TENSION SCREW 4X18WS	2	
047	182-0186A-20	WASHER	2	
050	167-21743-90	IGNITION COIL ASS'Y	1	
055	250-01680-20	INSULATOR TUBE	1	

S23 02	TED-25LPF CRANK CASE

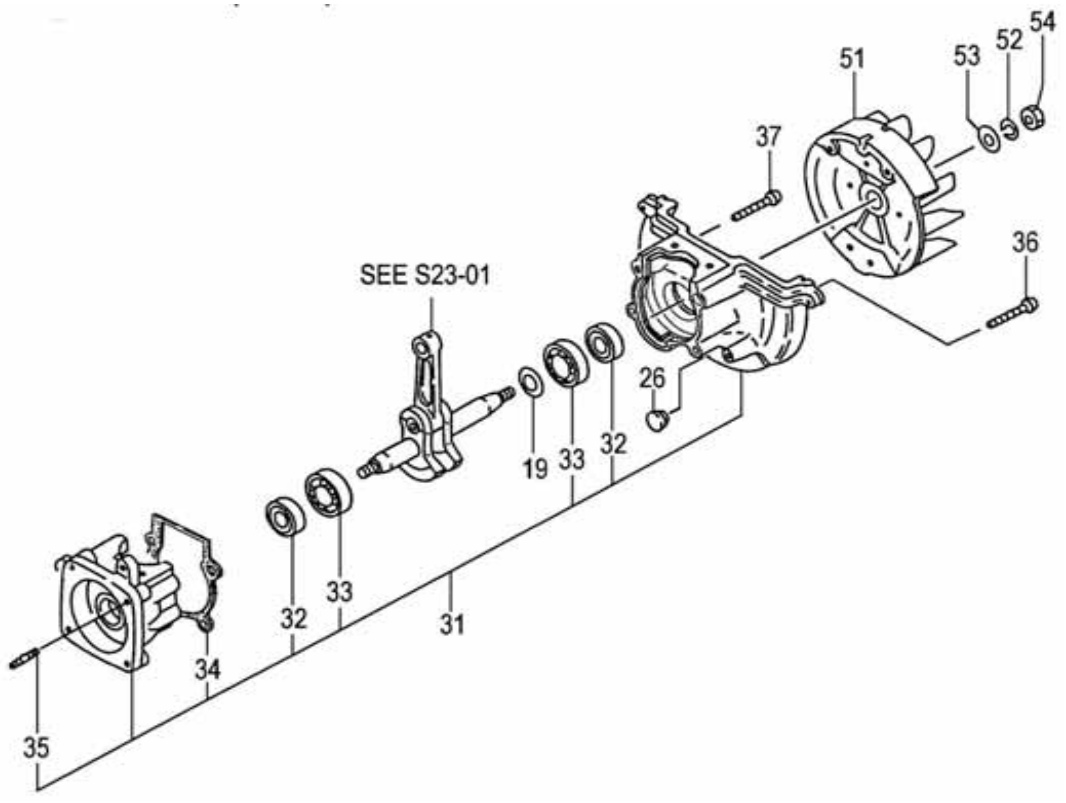

Parts List

Ref.	Part No.	Description	Q'ty	Serial No.
019	330-00200-21	GEAR SHAFT SHIM 0.10	V	
019	330-00200-22	GEAR SHAFT SHIM 0.15	V	
019	330-00200-23	GEAR SHAFT SHIM 0.20	V	
019	330-00200-24	GEAR SHAFT SHIM 0.30	V	
026	203-03002-20	GROMMET	1	
031	072-03013-90	CRANK CASE ASS'Y	1	
032	999-66122-200	OIL SEAL TB 12227	2	
033	999-61600-100	BALL BEARING #6001, 28MM/OD	2	
034	090-03002-20	CRANK CASE GASKET	1	
035	100-12000-20	STUD BOLT 6X26	2	
036	994-14050-301	SCREW 5X30/S	2	
037	994-14050-451	SCREW 5X45	2	
051	155-21744-80	MAGNETO ROTOR COMP.	1	
052	992-10080-012	S.WASHER 8	1	
053	992-01080-011	WASHER 8	1	
054	991-01080-011	HEX. NUT 8	1	

S23 03	TED-25LPF ENGINE-1

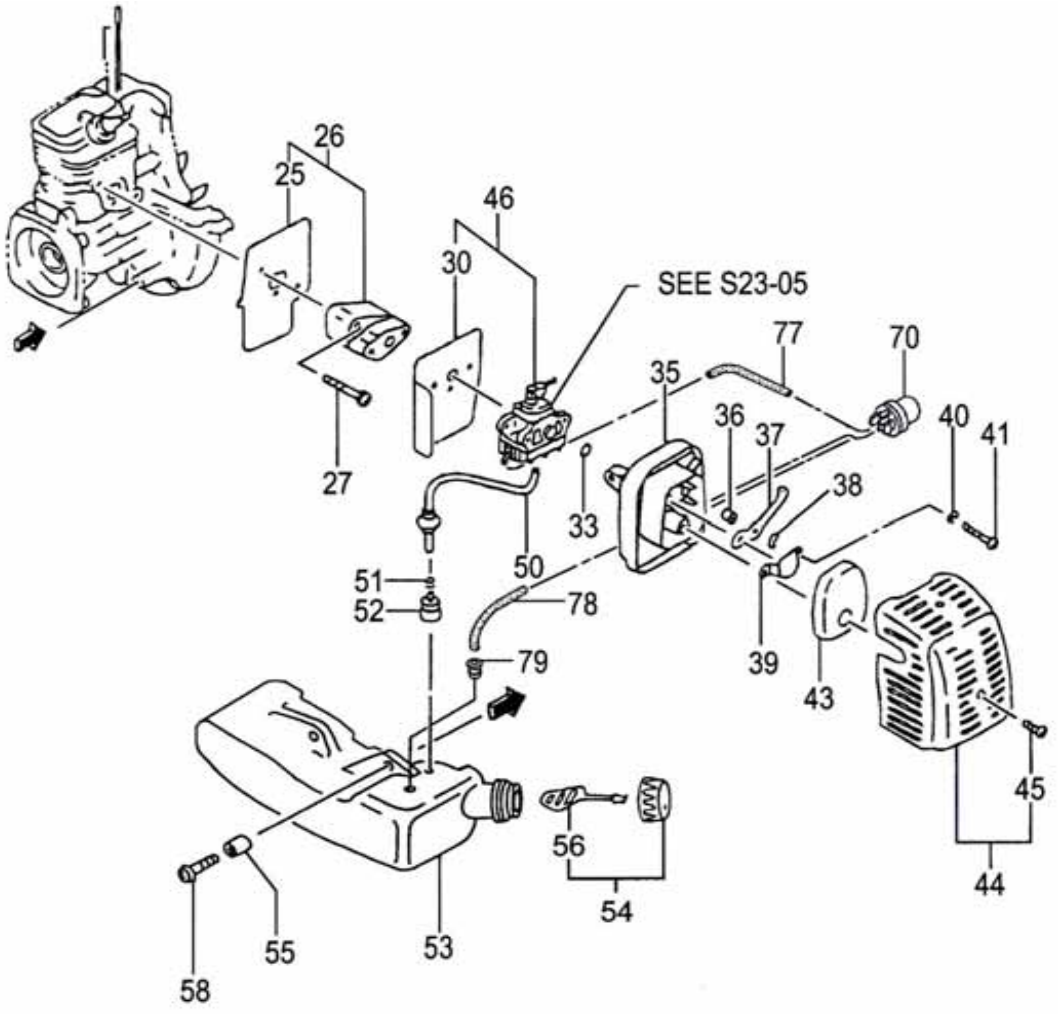

Parts List

Ref.	Part No.	Description	Q'ty	Serial No.
025	403-03002-20	INTAKE MANIFOLD GASKET	1	
026	404-03002-90	INSULATOR SET	1	
027	994-16050-241	SCREW 5X24WS	2	
030	402-03002-20	CARBURETOR GASKET	1	
033	999-67015-000	O-RING P-15	1	
035	423-06500-81	CLEANER BODY COMP.	1	
036	470-06500-20	COLLAR 7.5	2	
037	528-03002-20	CHOKE VALVE	1	
038	992-04080-031	WAVE WASHER 8	1	
039	476-01700-20	BLOW OVER CHECK BOARD	1	
040	992-10050-012	S.WASHER 5	2	
041	990-11050-602	SCREW 5X60	2	
043	446-06500-21	CLEANER SPONGE	1	
044	452-06500-91	CLEANER COVER ASS'Y	1	
045	380-0637C-20	SPECIAL SCREW	1	
046	455-03013-90	CARBURETOR SET	1	
050	223-07000-90	SHEELD TUBE	1	
051	680-00731-20	CLIP, 6.3 DIA.	1	
052	675-04042-80	PUMP FILTER BODY COMP.	1	
053	591-03002-20	FUEL TANK	1	- Y179450
053	591-03005-20	FUEL TANK	1	Y179451 -
054	595-01690-90	TANK CAP ASS'Y (BLACK)	1	
055	659-00801-20	COLLAR 5.8	2	
056	626-32550-20	TANK CAP CHAIN	1	
058	994-63050-185	HEX. HOLE BOLT 5X18PS	2	
070	442-25143-80	PRIMING PUMP COMP.	1	
077	700-02504-08	FUEL PIPE 2.5X4X80	1	
078	700-02504-07	FUEL PIPE 2.5X4X70	1	
079	534-32710-20	RETURN GROMMET	1	

S23 04	TED-25LPF ENGINE-2

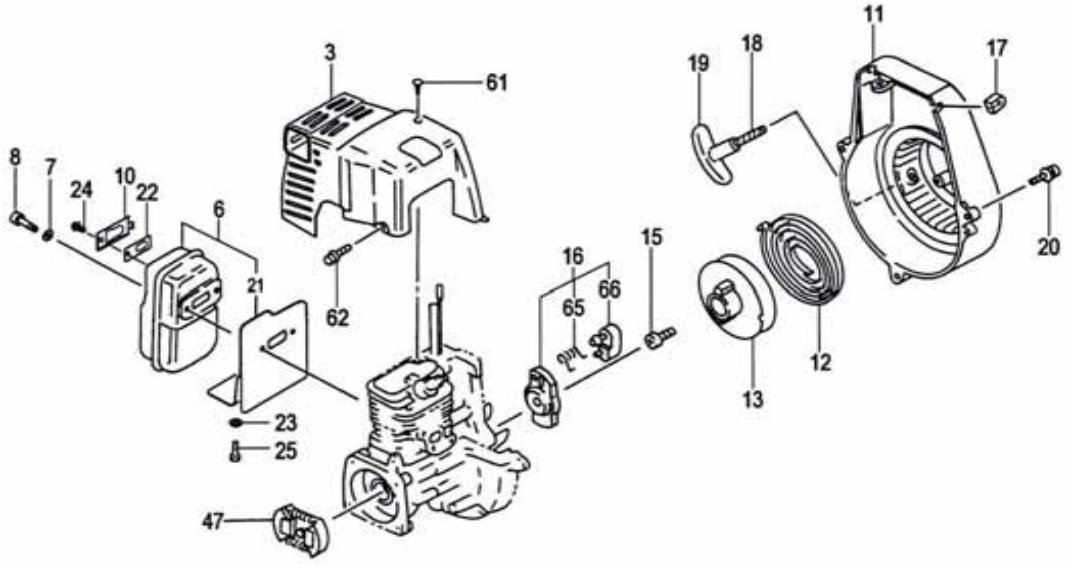

Parts List

Ref.	Part No.	Description	Q'ty	Serial No.
003	738-03002-21	MUFFLER PROTECTOR	1	
006	704-03013-90	MUFFLER SET	1	
007	992-01060-011	WASHER 6	2	
008	990-53060-553	HEX. HOLE SCREW 6X55	2	
010	721-04400-20	TAIL PIPE	1	
011	112-03010-80	FANCASE COMP.	1	
012	780-06097-20	RECOIL SPRING	1	
013	774-06097-20	STARTER ROPE REEL	1	
015	839-02010-20	SET SCREW	1	
016	798-06500-90	STARTER PULLEY ASS'Y	1	
017	203-06000-20	PRIMARY CORD GROMMET	1	
018	783-06097-20	STARTER ROPE	1	
019	785-06410-20	STARTER HANDLE	1	
020	994-15040-162	SCREW 4X16/PS	3	
021	735-03002-81	MUFFLER COVER A COMP.	1	
022	732-04400-20	MUFFLER ARRESTOR	1	
023	992-01050-011	WASHER 5	1	
024	994-35040-081	SCREW 4X8PS	1	
025	994-14050-081	SCREW 5X8/S	1	
047	277-0634F-90	CLUTCH A'SSY	1	
061	990-73045-104	TAPPING SCREW 4.5X10	1	
062	994-25040-128	BOLT 4X12PS	1	
065	790-06097-20	STARTER PAWL SPRING	1	
066	788-06500-20	STARTER PAWL	1	

S23 05	TED-25LPF CARBURETOR

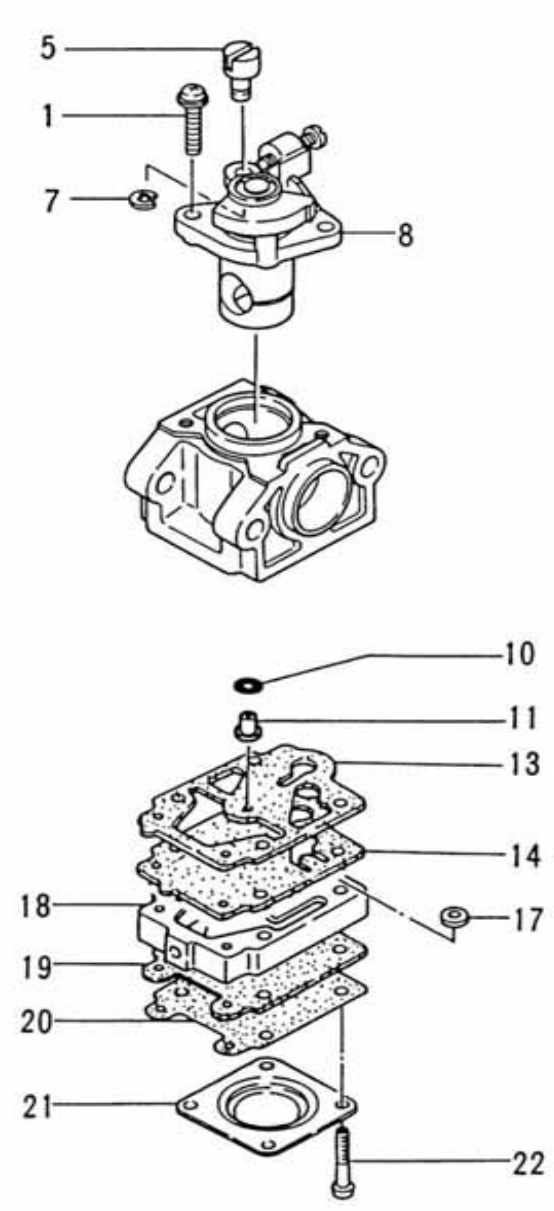

Parts List

Ref.	Part No.	Description	Q'ty	Serial No.
001	548-25140-20	THROTTLE SET SCREW	2	
005	539-25120-20	SWIVEL	1	
007	489-25100-20	STOP RING	1	
008	488-25145-80	THROTTLE VALVE COMP.	1	
010	550-25100-20	O-RING	1	
011	599-2001W-34	MAIN JET 34	1	
013	577-25100-20	PUMP GASKET	1	
014	576-25100-20	PUMP DIAPHRAGM	1	
017	578-25007-20	INLET SCREEN	1	
018	575-25225-80	PUMP BODY COMP.	1	
019	475-25038-20	DIAPHRAGM GASKET	1	
020	474-25001-80	METERING DIAPHRAGM COMP.	1	
021	476-25004-20	DIAPHRAGM COVER	1	
022	548-25101-20	SET SCREW	4	

S23 06	TED-25LPF GEAR CASE

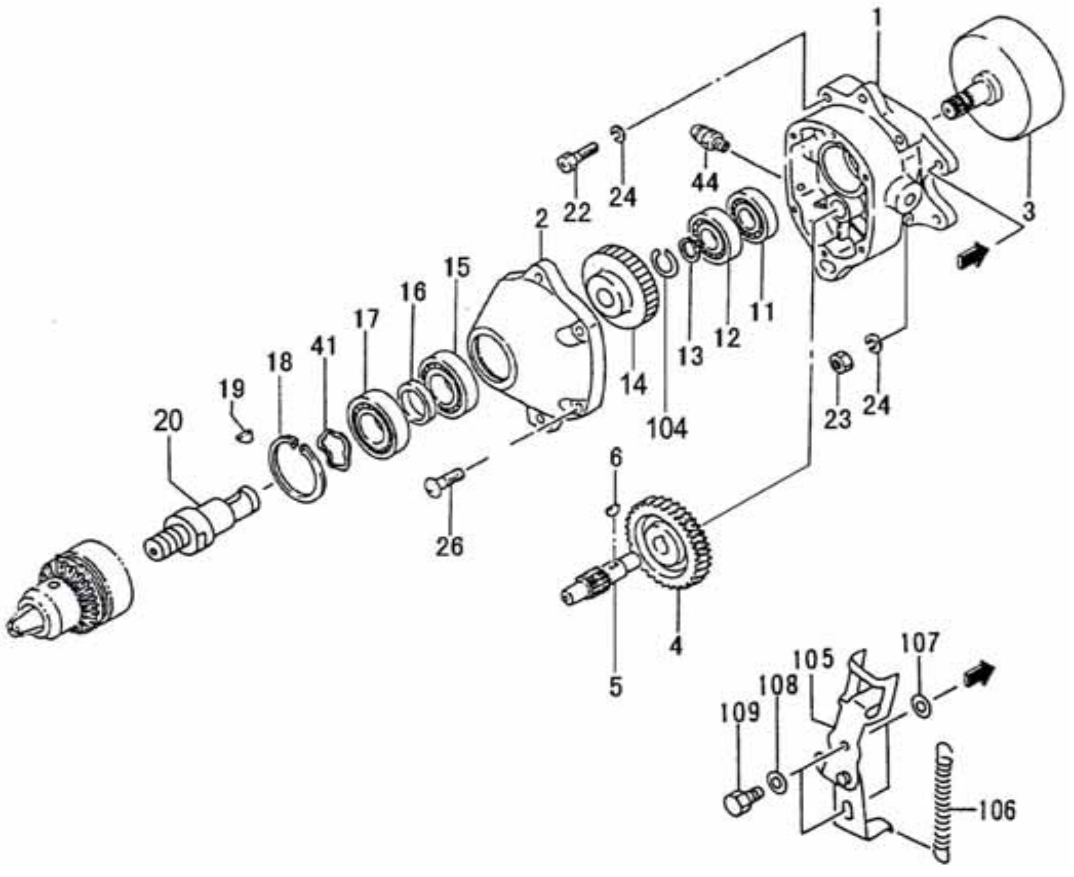

Parts List

Ref.	Part No.	Description	Q'ty	Serial No.
001	002-32182-80	GEAR CASE A COMP.	1	
002	006-3210A-80	GEAR CASE B COMP.	1	
003	226-32149-80	CLUTCH HOUSING COMP.	1	
004	012-32120-20	GEAR 2	1	
005	016-32120-20	GEAR 3	1	
006	068-00300-20	WOOD-RUFF KEY 3X10X3.7	1	
011	999-61600-102	BALL BEARING #6001Z, 28MM/OD	1	
012	999-61600-100	BALL BEARING #6001, 28MM/OD	1	
013	993-50012-002	STOP RING C-12, OUTER	1	
014	018-32182-20	GEAR 4	1	
015	999-61720-221	BALL BEARING #7202B, 35MM/OD	1	
016	040-32120-20	BEARING WASHER	1	
017	999-61620-202	BALL BEARING #6202Z, 35MM/OD	1	
018	993-51035-002	STOP RING C-35, INNER	1	
019	068-01006-20	WOOD-RUFF KEY 3X13X5	1	
020	022-32183-20	DRIVE SHAFT	1	
022	990-23060-301	PLUS BOLT 6X30	2	
023	994-40060-011	SPRING NUT 6	2	
024	992-10060-012	S.WASHER 6	2	
026	994-14050-181	SCREW 5X18/S	4	
041	992-09350-030	WAVE WASHER B.B 35	1	
044	300-32250-80	GREASE NIPPLE COMP.	1	
104	993-50013-002	STOP RING C-13, OUTER	1	
105	405-32149-80	LOCK LEVER	1	
106	406-32182-20	LOCK LEVER SPRING	1	
107	182-01700-20	SPECIAL WASHER	2	
108	992-01070-011	WASHER 7	2	
109	793-10200-20	STEP BOLT	2	

S23 07	TED-25LPF HANDLE

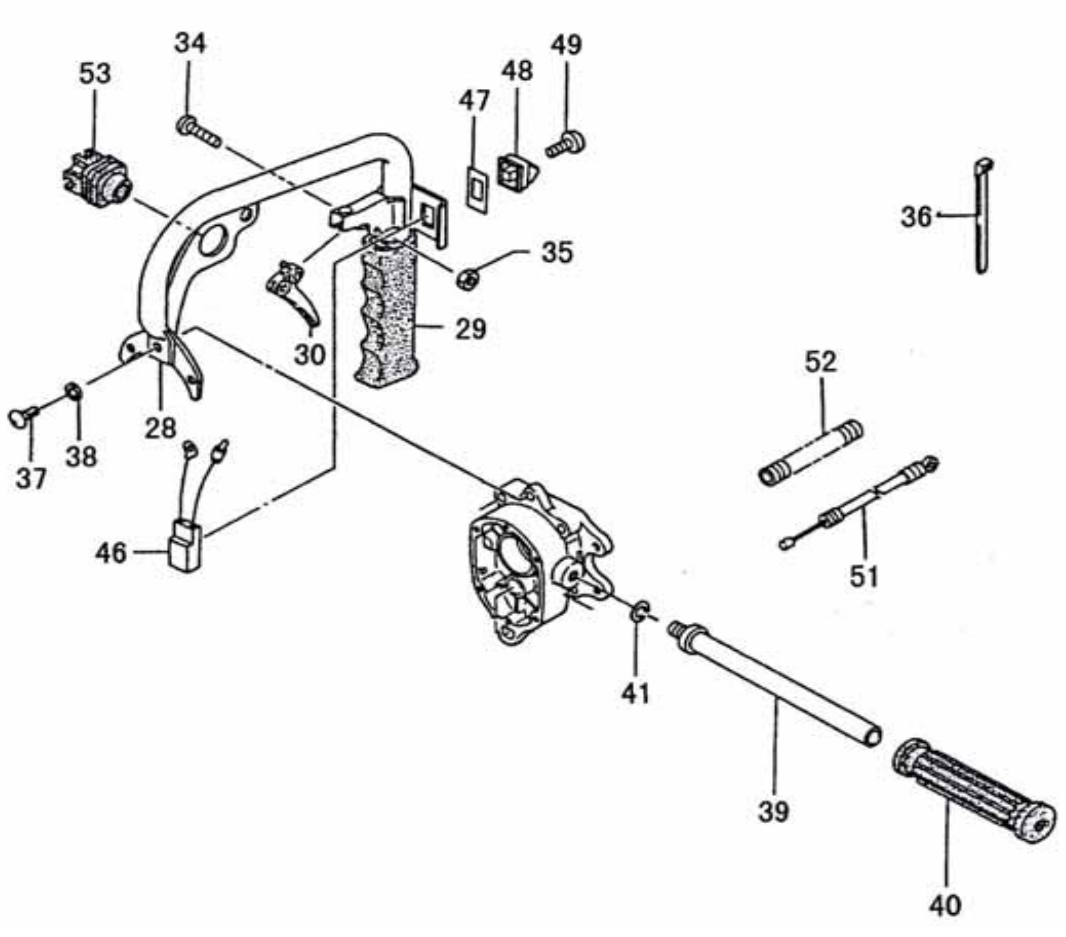

Parts List

Ref.	Part No.	Description	Q'ty	Serial No.
028	258-3210A-82	HANDLE COMP. A	1	
029	165-33130-20	HANDLE GRIP A	1	
030	101-32120-20	THROTTLE LEVER	1	
034	990-11050-251	SCREW 5X25	1	
035	991-01050-011	HEX. NUT 5	1	
036	198-33130-20	CORD CLAMP	2	
037	990-23060-161	PLUS BOLT 6X16	1	
038	992-10060-012	S.WASHER 6	1	
039	259-3210A-80	HANDLE COMP. B	1	
040	055-32130-20	HANDLE GRIP	1	
041	992-10100-012	S.WASHER 10	1	
046	156-3210A-80	STOP SWITCH COMP.	1	
047	925-33176-20	STOP BUTTON MARK	1	
048	258-11650-20	BUTTON STOP	1	
049	994-31030-101	SCREW 3X10	1	
051	885-06502-80	THROTTLE WIRE COMP.	1	
052	164-07029-00	CORRUGATED TUBE 7X290L	1	
053	155-3210A-20	CHUCK HANDLE HOLDER	1	

S23 08	TED-25LPF ACCESSORIES/TOOLS

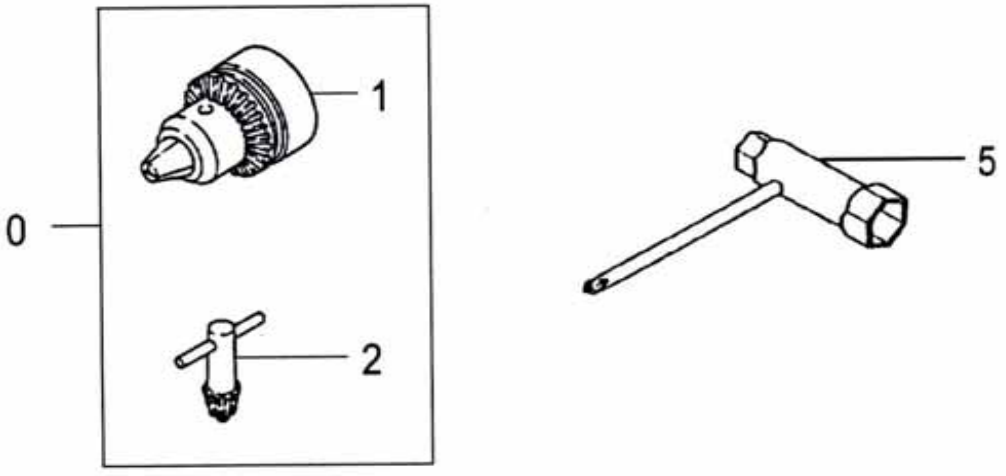

Parts List

Ref.	Part No.	Description	Q'ty	Serial No.
000	059-32120-91	CHUCK HANDLE SET	1	
001	060-32120-91	DRILL CHUCK ASS'Y	1	
002	061-32120-81	CHUCK HANDLE COMP.	1	
005	829-20000-80	COMBI BOX SPANNER 13X19 ,PLUS	1	