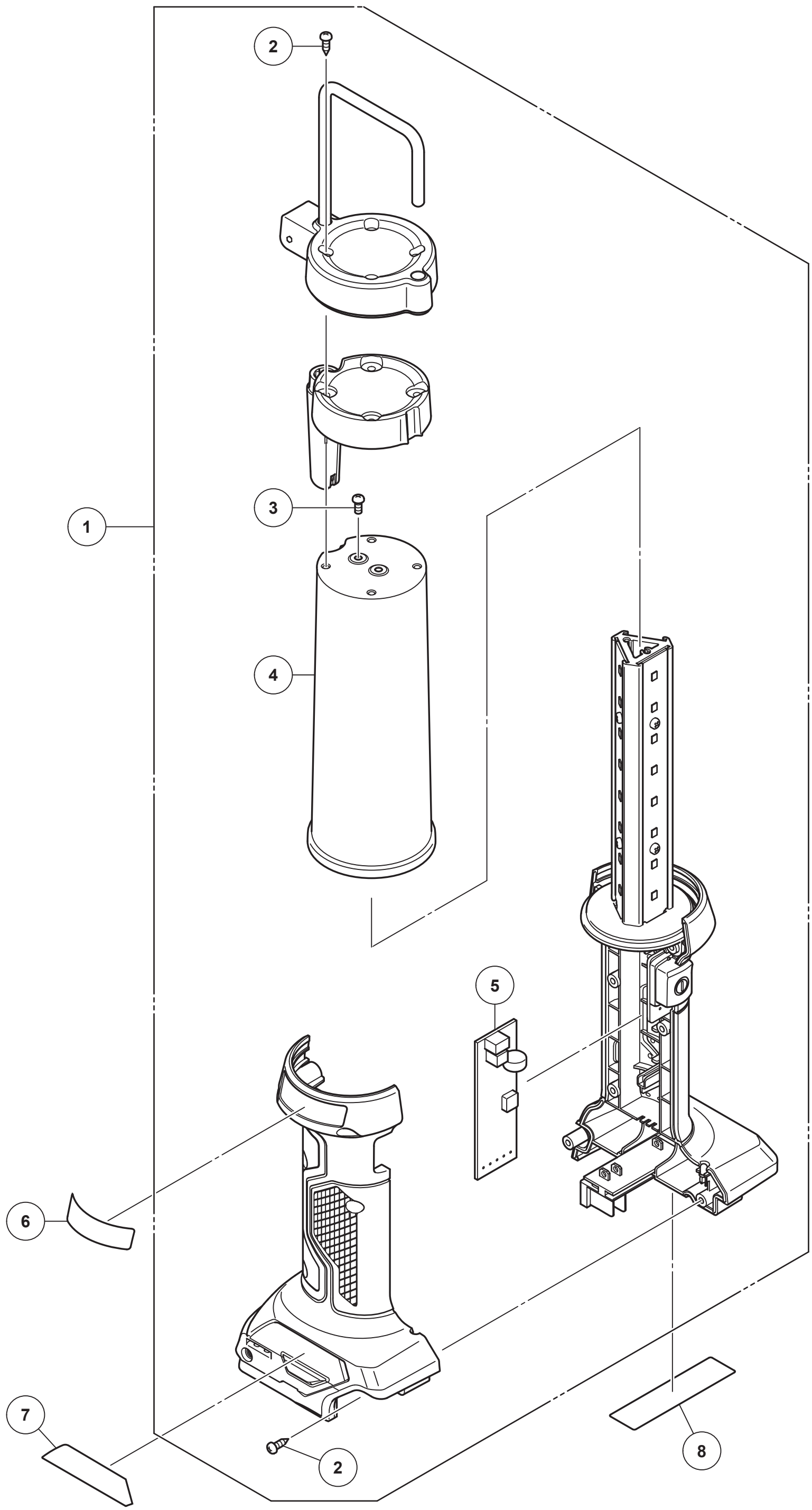

MODEL
UB18DF

Rev.1

HiKOKI

OEM UB18DF

Item No.	Code No.	Description	No. Used	Remarks
1		MAIN BODY	1	
2	379475	SCREW D3X12	11	
3	379479	SCREW M2.6X8	2	
4	379477	LAMP SHADE	1	
5	379478	MAIN PCBA	1	
6		NAME PLATE (A)	1	
7		NAME PLATE (B)	1	
*8		NAME PLATE (C)	1	
				FOR EUROPE,USA,CAN

* ALTERNATIVE PARTS