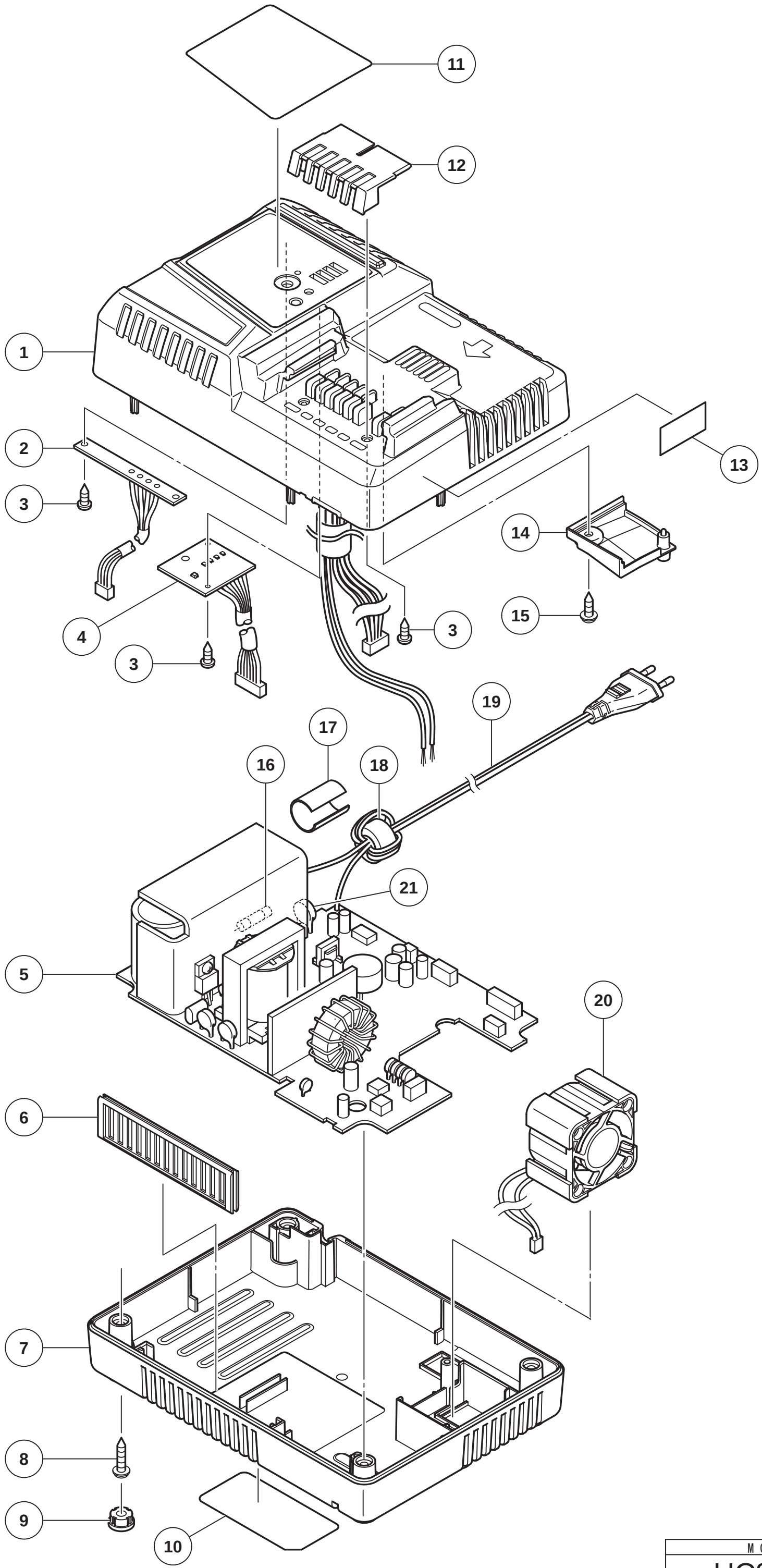

MODEL
UC36YSL

Rev.2

HiKOKI

CHARGER

Item No.	Code No.	Description	No. Used	Remarks
1	370108	CASE (A)	1	
2	339271	LED PCB	1	
3	339341	TAPPING SCREW (W/FLANGE) D2X8 (BLACK)	6	
4	370113	SWITCH PCB	1	
*5	370110	PRINTED CIRCUIT BOARD ASS'Y 100V-110V	1	INCLUD.16,21
*5	370111	PRINTED CIRCUIT BOARD ASS'Y 120V-127V	1	INCLUD.16
*5	370112	PRINTED CIRCUIT BOARD ASS'Y 220V-240V	1	INCLUD.16
6	339273	FILTER	1	
7	370109	CASE (B)	1	
8A	376623	TP. TORX SCREW D3X18	4	
9	338717	RUBBER (A)	4	
10			1	
10		NAME PLATE	1	
11	370118	BRAND LABEL	1	
12	338715	COVER	1	
13		NAME PLATE	1	
13		FOR AUS,NZL	1	
14	370114	AIR DUCT	1	
15	327174	TP TAPPING SCREW D3X8	1	
16	370116	FUSE (10A/250V)	1	
17	370117	CUSHION	1	EXCEPT FOR USA,CAM
18	334379	FERRITE CORE	1	EXCEPT FOR USA,CAN
19	336600	CORD (BRAZIL)	1	
*19	500511Z	CORD (EURO)	1	
*19	500514Z	CORD (KOREA)	1	FOR KOR,IND,SIN,VIE,INA
*19	336596	CORD (U.K)	1	FOR GBR,MAL,HKG,USE
*19	336601	CORD (CHINA)	1	FOR THAMPHI,CHN
*19	500512Z	CORD (NZ)	1	FOR AUS,NZL
*19	500499Z	CORD	1	FOR USA,CAN
*19	336600	CORD (BRAZIL)	1	FOR BRA
20	370115	FAN	1	
*21	370164	VARISTOR	1	FOR TPE

* ALTERNATIVE PARTS