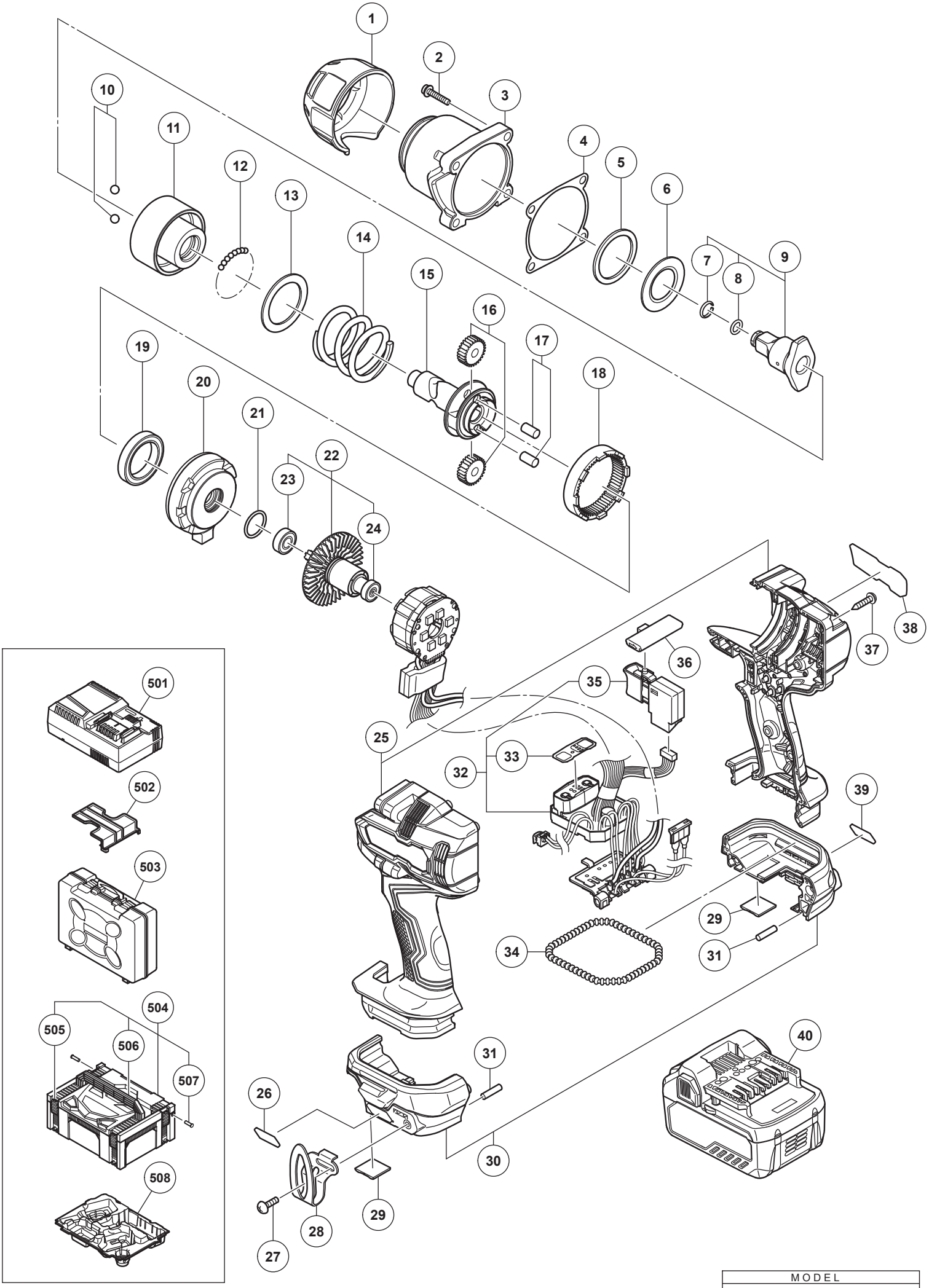

MODEL

WR36DE

Rev.1

ITEM NO.	CODE NO.	DESCRIPTION	NO. USED	REMARKS
1	377416	FRONT CAP	1	
2	991712	HEX. SOCKET HD. BOLT (W/FLANGE) M6 X 25	4	
3	377417	HAMMER CASE	1	
4	377418	PACKING	1	
5	377419	THRUST DAMPER	1	
6	377420	WASHER (F)	1	
7	370951	FRICTION RING (B)	1	
8	315382	O-RING (P-8)	1	
9	377345	ANVIL (B) ASS'Y	1	INCLUD. 7, 8
10	959150	STEEL BALL D6.35 (10 PCS.)	2	
11	377423	HAMMER	1	
12	959155	STEEL BALL D3.97 (10 PCS.)	31	
13	377424	WASHER (J)	1	
14	377425	HAMMER SPRING	1	
15	377426	SPINDLE	1	
16	377427	IDLE GEAR SET (2 PCS.)	2	
17	377428	NEEDLE ROLLER	2	
18	377429	RING GEAR	1	
19	377430	BALL BEARING 6806VVCM	1	
20	377431	INNER COVER	1	
21	377432	O-RING	1	
22	361161	ROTOR ASS'Y	1	INCLUD. 23, 24
23	337720	BALL BEARING 698DD	1	
24	333826	BALL BEARING 625DD	1	
*25	377344	HOUSING (A).(B) SET	1	
*25	377344M	HOUSING (A).(B) SET	1	FOR USA, CAN
26	373914	MV LABEL (B)	1	
27	373378	TRUSS HD. SCREW M4 (BLACK)	1	
28	372229	HOOK	1	
29	373040	SIDE BUMPER	2	
30	373032	HOUSING (C).(D) SET	1	
31	373041	REAR BUMPER	2	
32	341091	WIRING ASS'Y	1	INCLUD. 33, 35
33	377346	PANEL SHEET (B)	1	
34	373039	JOINT RUBBER	1	
35	376527	DC-SPEED CONTROL SWITCH	1	
36	373301	PUSHING BUTTON	1	
37	339250	TAPPING SCREW (W/FLANGE) D4 X 20	9	
38		NAME PLATE	1	
39	373913	MV LABEL (A)	1	
*40	371750	BATTERY BSL 36A18 (EUROPE, AUS, NZL)	2	INCLUD. 502
*40	371751M	BATTERY BSL 36A18 (USA, CAN)	2	INCLUD. 502
STANDARD ACCESSORIES				
501		CHARGER (MODEL UC 18YSL3)	1	
502	329897	BATTERY COVER	1	
503	377282	CASE	1	
504	336471	CASE ASS'Y (STACKABLE 2)	1	INCLUD. 505-507
505	336472	LATCH	4	
506	336473	HANDLE	1	
507	336474	HINGE	2	
508	377283	INNER TRAY	1	
OPTIONAL ACCESSORIES				
601	306927	SILICONE RUBBER	1	
602	309922	GREASE (ATTOLUB MS NO. 2) 500 G	1	
603	325149	GREASE (MOLUB-ALLOY NO. 777-1) 75 G	1	